COPYRIGHT © 2020 DIGI INTERNATIONAL,
UNPUBLISHED WORK - ALL RIGHTS RESERVED.

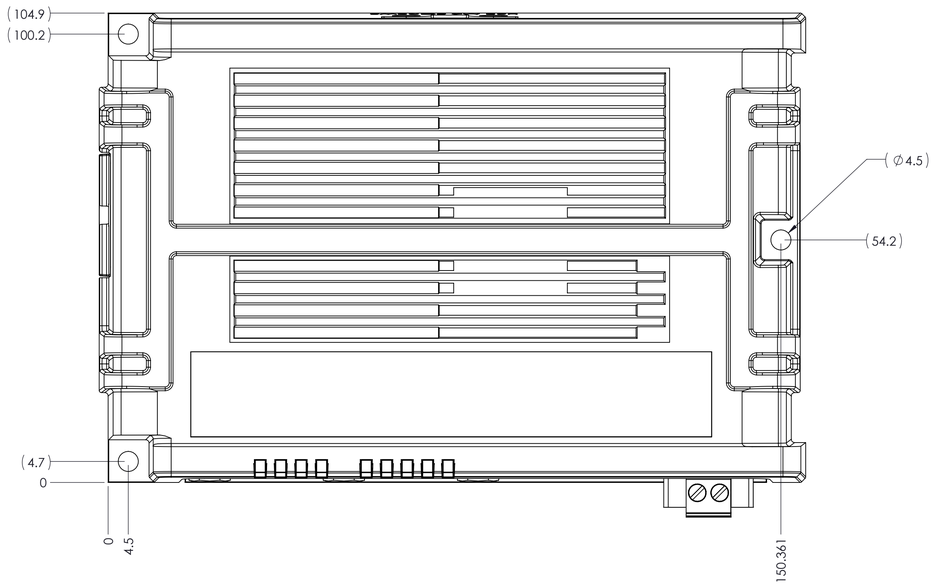

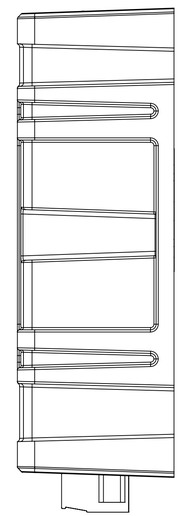

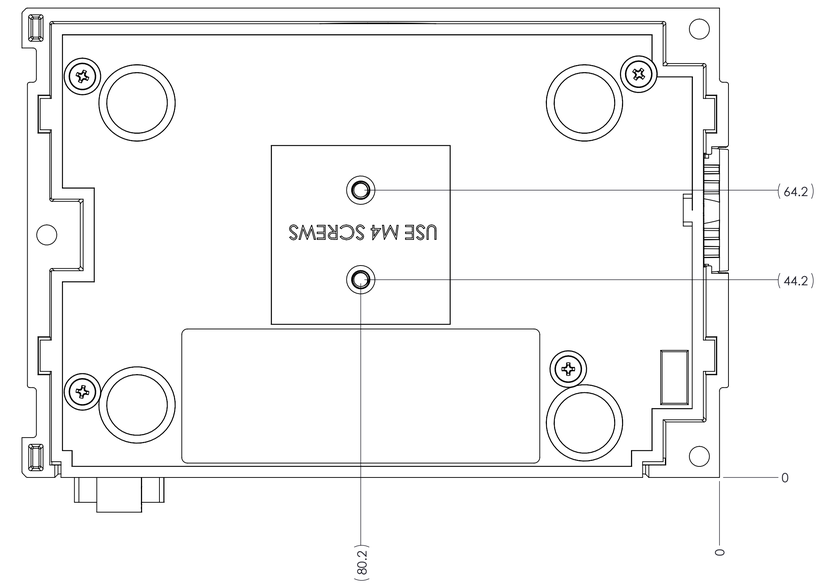

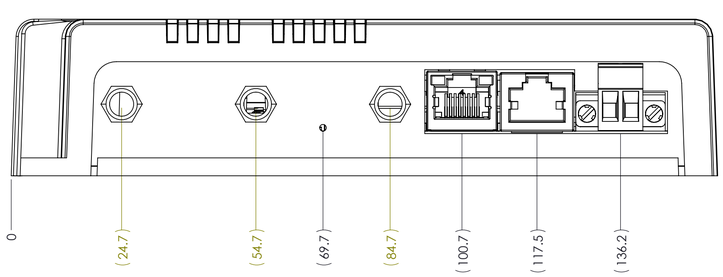

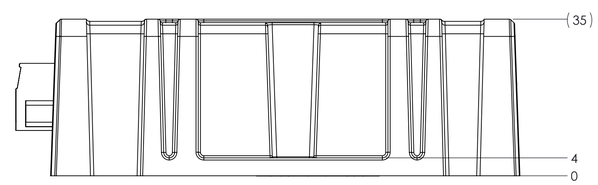

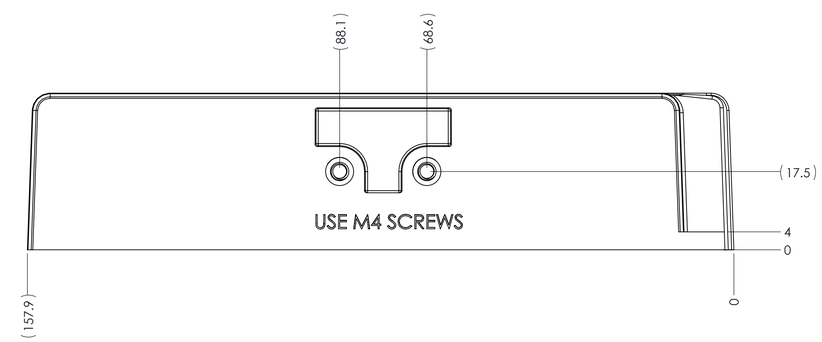

DIGI INTERNATIONAL
WWW.DIGI.COM

TITLE	DWG, ASSY IX15 GATEWAY		
SIZE D	CAGE CODE 08TP3	DWG NO: 50002036-XX	REV A
SCALE NTS	DO NOT SCALE DRAWING	SHEET 2 OF 2	