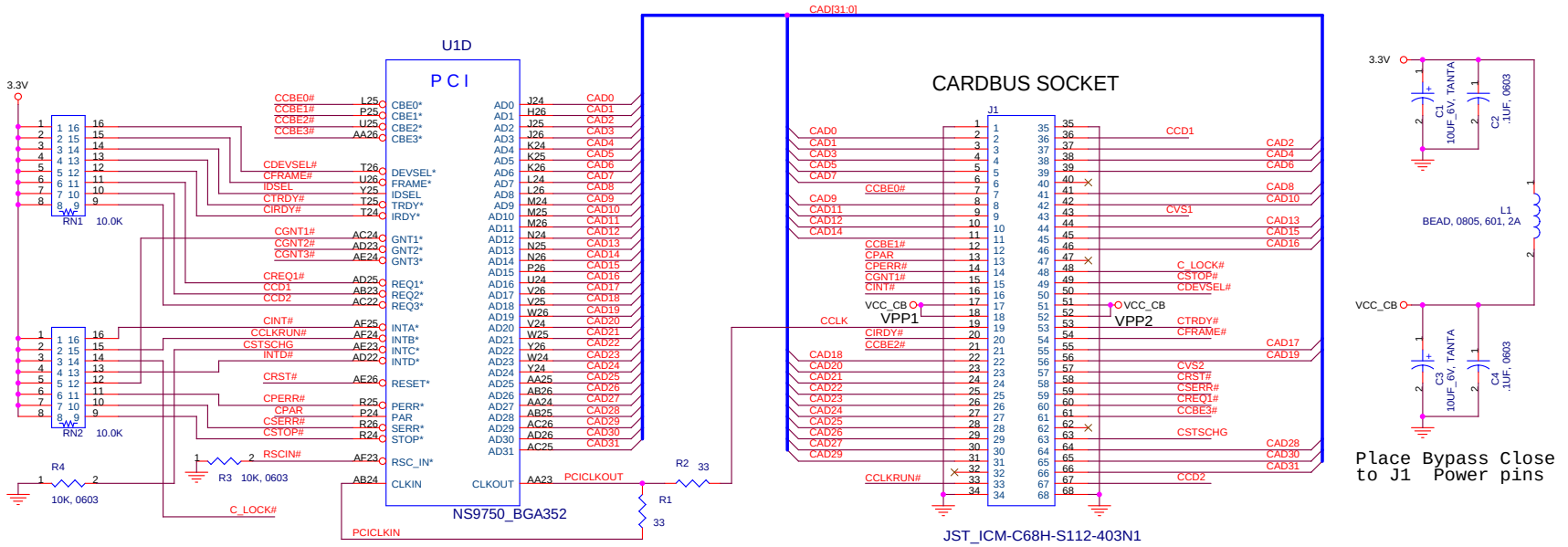

Place Bypass Close to J1 Power pins

Notes:
1) The CardBus sheet does not show 2 of the hardware configuration pins for PCI: Be sure that RTCK (pin AD19) is left in its default state - Logic 1. It has an internal pull-up.

BOOT_STRAP[1] (pin N3) requires a 2.4K pull-down to select CardBus mode. This will over-ride its internal pull-up.

2) The CardBus Socket does not support hotswap.

3) The NS9750 CardBus interface is not 16 bit PCMCIA compatible. Only 3.3V X 32 bit cards are supported.

4) Maximum CardBus capacitance load = 22pf; Pins + traces. This leaves 10pF for traces.

5) Other GPIO's can be used by modifing NET+OS.

CardBus Connector
J.S.T. MFG. Co.,
LTDICM-C68H-S112-403N1

Card Guide
J.S.T. MFG. Co.,
LTDICME-C68R-303H

Card guide Mounting Screws
fastener-express.com
SCR,M2 8mm PH PH SS ZP
SCR,M2 10mm PH PH SS ZP

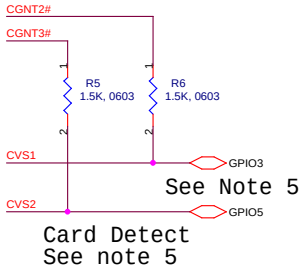

NS9750 PCI to CardBus
Rev B; June 21, 2005