Table of Contents

2	Notes
3	Block Diagram
4	Power tree
5	CPU EIM & DRAM
6	Ethernet, Debug UART
7	i.MX LCD & Boot modes
8	i.MX NAND & SSP
9	i.MX Power supplies
10	i.MX DC/DC converter & JTAG
11	ISM
12	ZigBee
13	Audio - SGTL5000
14	Bluetooth - Wifi mini PCIe
15	USB Hub
16	NFC & IO expander
17	Discrete power supply

freescale semiconductor

Microcontroller Solutions Group

6501 William Cannon Drive West
Austin, TX 78735-8598

This document contains information proprietary to Freescale Semiconductor and shall not be used for engineering design, procurement or manufacture in whole or in part without the express written permission of Freescale Semiconductor.

ICAP Classification: FCP: FIUO: X PUBI:

Designer: DESIGNER	Drawing Title: i.MX28 Home Health Hub		
Drawn by: DRAWN_BY	Page Title: TITLE PAGE		
Approved: APPROVER	Size C	Document Number SCH-XXXXX PDF: SPF-XXXXX	Rev 1.0
	Date: Friday, December 16, 2011	Sheet 1 of 17	

1. Unless Otherwise Specified:
   All resistors are in ohms, 5%, 1/8 Watt
   All capacitors are in uF, 20%, 50V
   All voltages are DC
   All polarized capacitors are aluminum electrolytic

2. Interrupted lines coded with the same letter or letter combinations are electrically connected.

3. Device type number is for reference only. The number varies with the manufacturer.

4. Special signal usage:
   _B Denotes - Active-Low Signal
   <> or [] Denotes - Vectored Signals

5. Interpret diagram in accordance with American National Standards Institute specifications, current revision, with the exception of logic block symbology.

Revision table
03/07/2011 - Revision 0. Import HEM schematics
28/09/2011 - Revision 1. Schematic freeze for first board release
14/12/2011 - Revision 2.
02/20/2012 - Add isolation between MX and USB2SER.
04/11/2012 - Update component part number to match with manufacturer stock

freescale semiconductor

ICAP Classification: FCP: ___ FIUO: X PUBI: ___

Drawing Title: i.MX28 Home Health Hub

Page Title: NOTES

Size	Document Number	Rev
C	SCH-XXXXX PDF: SPF-XXXXX	1.0

Date: Wednesday, April 11, 2012 Sheet 2 of 17

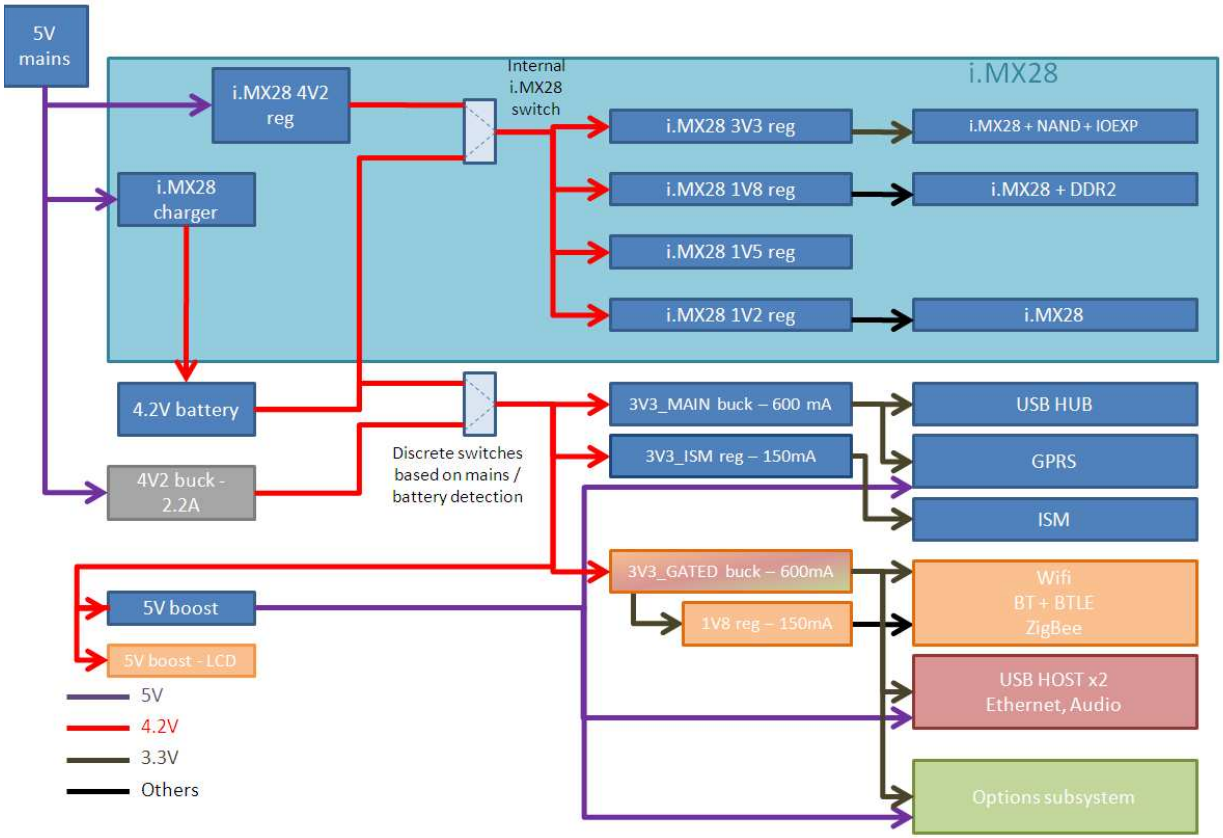

freescale semiconductor

ICAP Classification: FCP: ___ FIUO: X PUBI: ___

Drawing Title: **i.MX28 Home Health Hub**

Page Title: **Power tree**

Size	Document Number	Rev
C	SCH-XXXXX PDF: SPF-XXXXX	1.0

Date: Friday, December 16, 2011 | Sheet 3 of 17

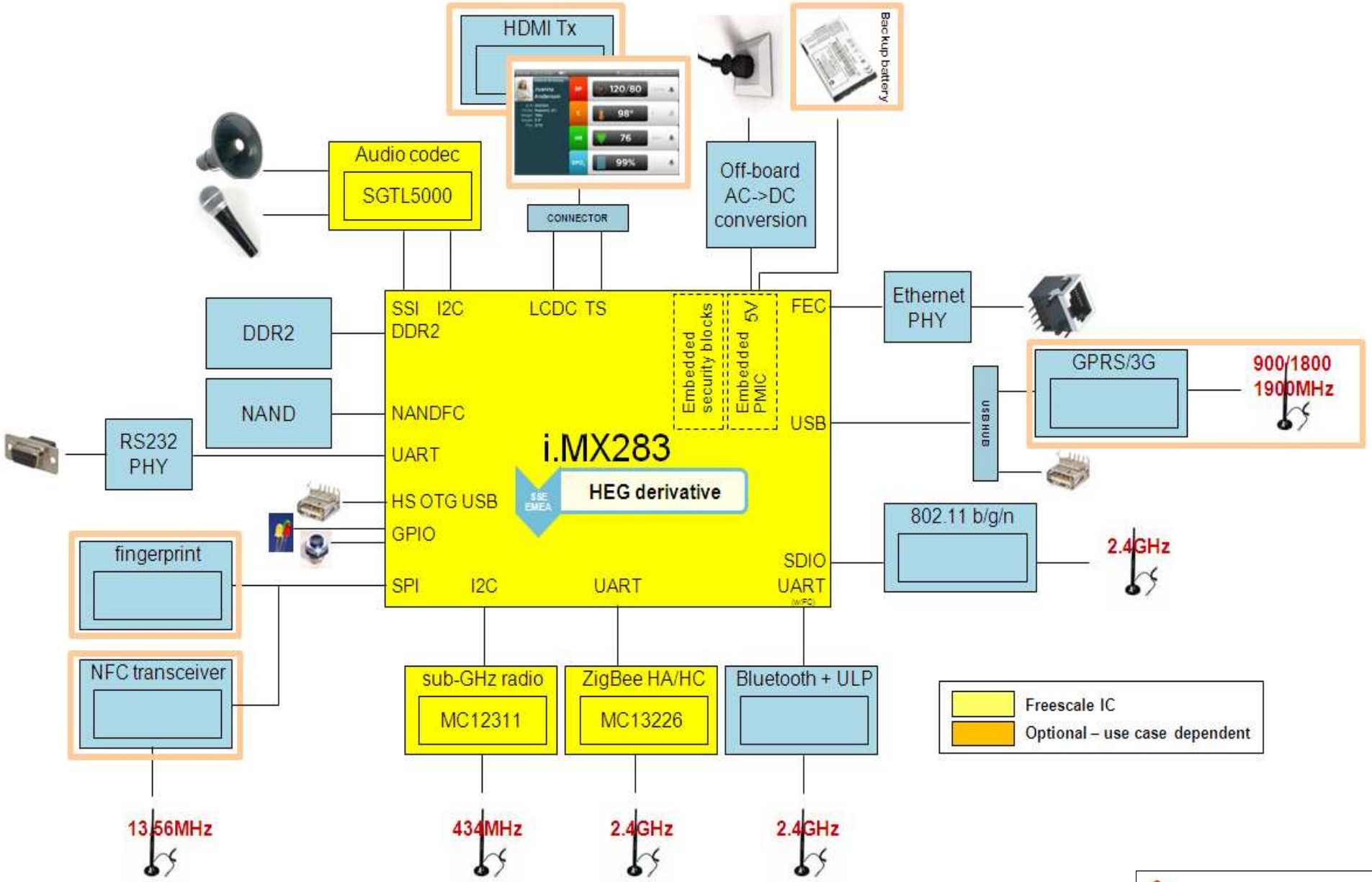

freescale semiconductor

ICAP Classification: FCP: ___ FIUO: X PUBI: ___

Drawing Title: **i.MX28 Home Health Hub**

Page Title: **Block Diagram**

Size	Document Number	Rev
C	SCH-XXXXX PDF: SPF-XXXXX	1.0

Date: Friday, December 16, 2011 Sheet 3 of 17

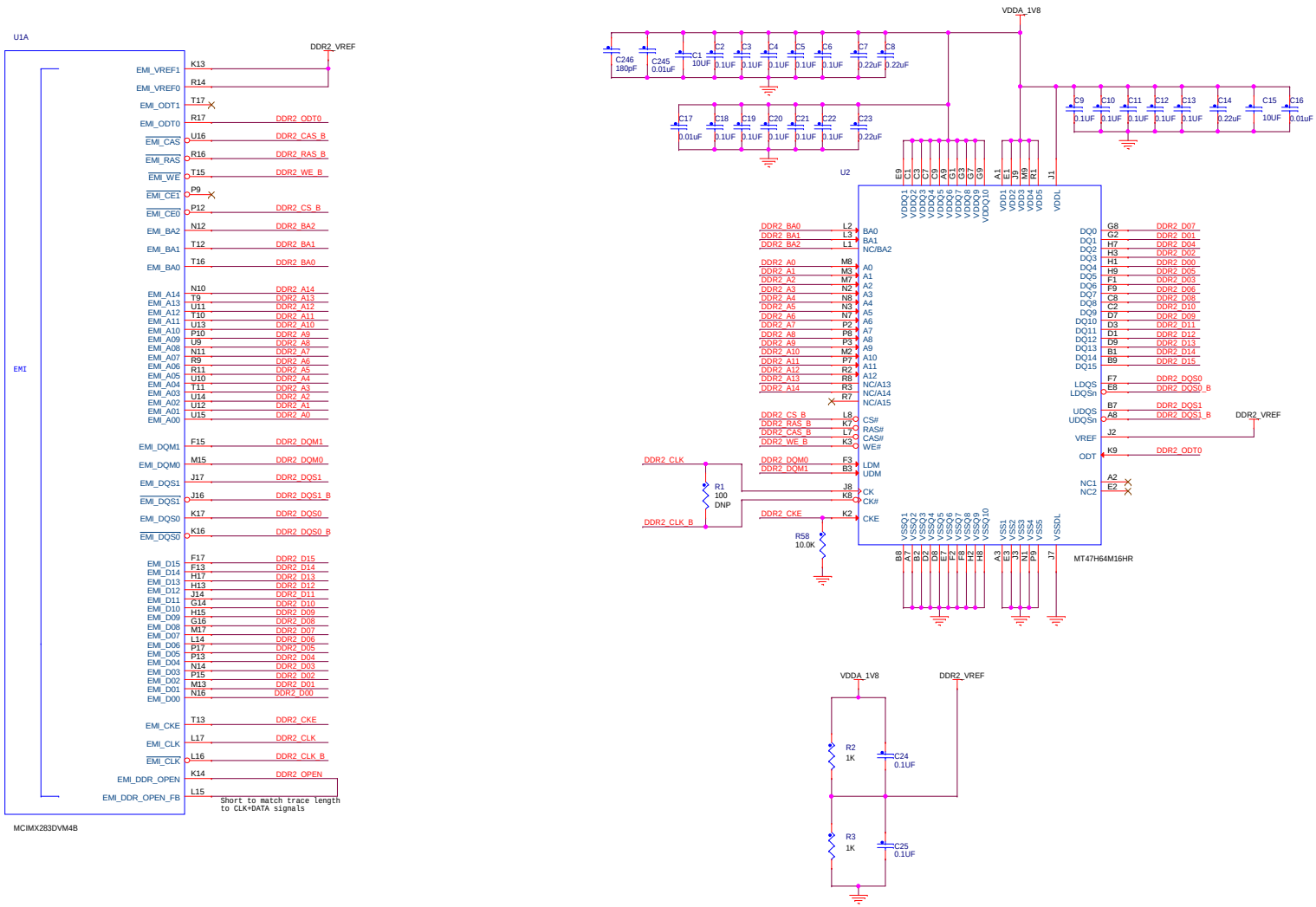

<Variant Name>

freescale semiconductor

ICAP Classification: FCP: ___ FIUO: X PUBI: ___

Drawing Title: **i.MX28 Home Health Hub**

Page Title: **CPU - EIM - DRAM**

Size	Document Number	Rev
C	SCH-XXXXX PDF: SPF-XXXXX	1.0

Date: Wednesday, April 11, 2012 Sheet 5 of 17

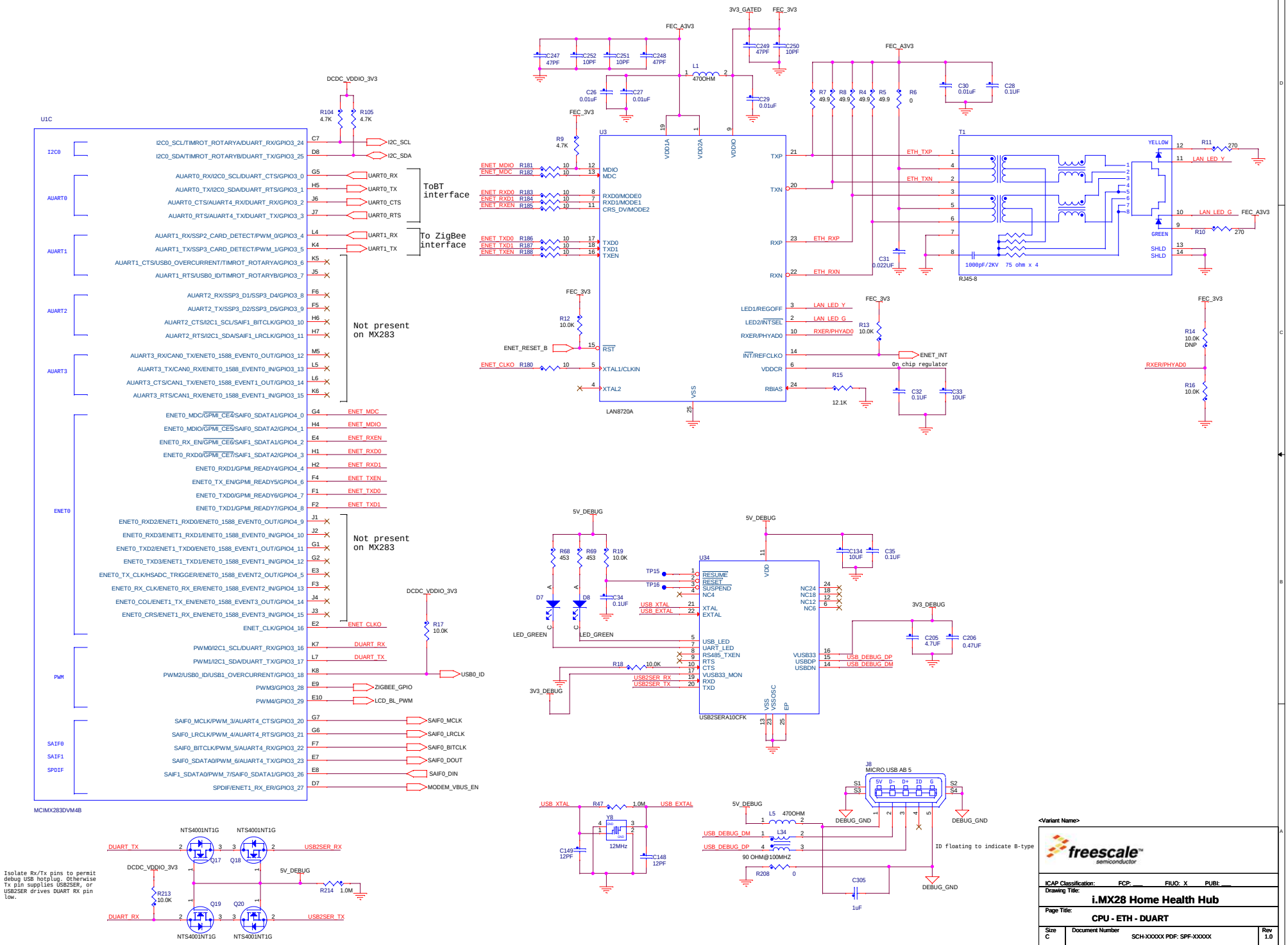
U1C
MCIMX283DVM4B
I2C0
AUART0
AUART1
AUART2
AUART3
ENET0
PWM
SAIF0
SAIF1
SPDIF
I2C0_SCL/TIMROT_ROTARYA/DUART_RX/GPIO3_24
I2C0_SDA/TIMROT_ROTARYB/DUART_TX/GPIO3_25
AUART0_RX/I2C0_SCL/DUART_CTS/GPIO3_0
AUART0_TX/I2C0_SDA/DUART_RTS/GPIO3_1
AUART0_CTS/AUART4_RX/DUART_RX/GPIO3_2
AUART0_RTS/AUART4_TX/DUART_TX/GPIO3_3
AUART1_RX/SSP2_CARD_DETECT/PWM_0/GPIO3_4
AUART1_TX/SSP3_CARD_DETECT/PWM_1/GPIO3_5
AUART1_CTS/USB0_OVERCURRENT/TIMROT_ROTARYA/GPIO3_6
AUART1_RTS/USB0_ID/TIMROT_ROTARYB/GPIO3_7
AUART2_RX/SSP3_D1/SSP3_D4/GPIO3_8
AUART2_TX/SSP3_D2/SSP3_D5/GPIO3_9
AUART2_CTS/I2C1_SCL/SAIF1_BITCLK/GPIO3_10
AUART2_RTS/I2C1_SDA/SAIF1_LRCLK/GPIO3_11
AUART3_RX/CAN0_TX/ENET0_1588_EVENT0_OUT/GPIO3_12
AUART3_TX/CAN0_RX/ENET0_1588_EVENT0_IN/GPIO3_13
AUART3_CTS/CAN1_TX/ENET0_1588_EVENT1_OUT/GPIO3_14
AUART3_RTS/CAN1_RX/ENET0_1588_EVENT1_IN/GPIO3_15
ENET0_MDC/GPMI_CE4/SAIF0_SDATA1/GPIO4_0
ENET0_MDIO/GPMI_CE5/SAIF0_SDATA2/GPIO4_1
ENET0_RX_EN/GPMI_CE6/SAIF1_SDATA1/GPIO4_2
ENET0_RXD0/GPMI_CE7/SAIF1_SDATA2/GPIO4_3
ENET0_RXD1/GPMI_READY4/GPIO4_4
ENET0_TX_EN/GPMI_READY5/GPIO4_6
ENET0_TXD0/GPMI_READY6/GPIO4_7
ENET0_TXD1/GPMI_READY7/GPIO4_8
ENET0_RXD2/ENET1_RXD0/ENET0_1588_EVENT0_OUT/GPIO4_9
ENET0_RXD3/ENET1_RXD1/ENET0_1588_EVENT0_IN/GPIO4_10
ENET0_TXD2/ENET1_TXD0/ENET0_1588_EVENT1_OUT/GPIO4_11
ENET0_TXD3/ENET1_TXD1/ENET0_1588_EVENT1_IN/GPIO4_12
ENET0_TX_CLK/HSADC_TRIGGER/ENET0_1588_EVENT2_OUT/GPIO4_5
ENET0_RX_CLK/ENET0_RX_ER/ENET0_1588_EVENT2_IN/GPIO4_13
ENET0_COL/ENET1_TX_EN/ENET0_1588_EVENT3_OUT/GPIO4_14
ENET0_CRS/ENET1_RX_EN/ENET0_1588_EVENT3_IN/GPIO4_15
ENET_CLK/GPIO4_16
PWM0/I2C1_SCL/DUART_RX/GPIO3_16
PWM1/I2C1_SDA/DUART_TX/GPIO3_17
PWM2/USB0_ID/USB1_OVERCURRENT/GPIO3_18
PWM3/GPIO3_28
PWM4/GPIO3_29
SAIF0_MCLK/PWM_3/AUART4_CTS/GPIO3_20
SAIF0_LRCLK/PWM_4/AUART4_RTS/GPIO3_21
SAIF0_BITCLK/PWM_5/AUART4_RX/GPIO3_22
SAIF0_SDATA0/PWM_6/AUART4_TX/GPIO3_23
SAIF1_SDATA0/PWM_7/SAIF0_SDATA1/GPIO3_26
SPDIF/ENET1_RX_ER/GPIO3_27
I2C_SCL
I2C_SDA
UART0_RX
UART0_TX
UART0_CTS
UART0_RTS
ToBT interface
UART1_RX
UART1_TX
To ZigBee interface
Not present on MX283
ENET_MDC
ENET_MDIO
ENET_RXEN
ENET_RXD0
ENET_RXD1
ENET_TXEN
ENET_TXD0
ENET_TXD1
ENET_CLKO
DUART_RX
DUART_TX
ZIGBEE_GPIO
LCD_BL_PWM
USB0_ID
SAIF0_MCLK
SAIF0_LRCLK
SAIF0_BITCLK
SAIF0_DOUT
SAIF0_DIN
MODEM_VBUS_EN
DCDC_VDDIO_3V3
R104 4.7K
R105 4.7K
R17 10.0K
FEC_A3V3
FEC_3V3
3V3_GATED
C247 47PF
C252 10PF
C251 10PF
C248 47PF
L1 470OHM
C249 47PF
C250 10PF
C26 0.01uF
C27 0.01uF
C29 0.01uF
C30 0.01uF
C28 0.1UF
R9 4.7K
R12 10.0K
R13 10.0K
R14 10.0K DNP
R16 10.0K
R15 12.1K
R7 49.9
R8 49.9
R4 49.9
R5 49.9
R6 0
C31 0.022UF
C32 0.1UF
C33 10UF
U3
LAN8720A
VDD1A
VDD2A
VDDIO
VSS
MDIO
MDC
RXD0/MODE0
RXD1/MODE1
CRS_DV/MODE2
TXD0
TXD1
TXEN
RST
XTAL1/CLKIN
XTAL2
TXP
TXN
RXP
RXN
LED1/REGOFF
LED2/INTSEL
RXER/PHYAD0
INT/REFCLKO
VDDCR
RBIAS
ENET_MDIO R181
ENET_MDC R182
ENET_RXD0 R183
ENET_RXD1 R184
ENET_RXEN R185
ENET_TXD0 R186
ENET_TXD1 R187
ENET_TXEN R188
ENET_RESET_B
ENET_CLKO R180
ETH_TXP
ETH_TXN
ETH_RXP
ETH_RXN
LAN_LED_Y
LAN_LED_G
ENET_INT
On chip regulator
T1
RJ45-8
YELLOW
GREEN
R11 270
R10 270
SHLD
1000pF/2KV 75 ohm x 4
5V_DEBUG
R68 453
R69 453
R19 10.0K
D7
D8
C34 0.1UF
TP15
TP16
LED_GREEN
USB_XTAL
USB_EXTAL
R18 10.0K
3V3_DEBUG
U34
USB2SERA10CFK
RESUME
RESET
SUSPEND
NC4
XTAL
EXTAL
USB_LED
UART_LED
RS485_TXEN
RTS
CTS
VUSB33_MON
RXD
TXD
VDD
NC24
NC18
NC12
NC6
VUSB33
USBDP
USBDN
USB2SER_RX
USB2SER_TX
USB_DEBUG_DP
USB_DEBUG_DM
C134 10UF
C35 0.1UF
C205 4.7UF
C206 0.47UF
VSS
VSSOSC
EP
J8
MICRO USB AB 5
5V D- D+ ID G
S1 S3
S2 S4
DEBUG_GND
R47 1.0M
Y8 12MHz
C149 12PF
C148 12PF
L5 470OHM
L34 90 OHM@100MHZ
R208 0
C305 1uF
ID floating to indicate B-type
NTS4001NT1G
Q17
Q18
Q19
Q20
R213 10.0K
R214 1.0M
Isolate Rx/Tx pins to permit debug USB hotplug. Otherwise Tx pin supplies USB2SER, or USB2SER drives DUART RX pin low.
<Variant Name>
freescale semiconductor
ICAP Classification: FCP: ___ FIUO: X PUBI: ___
Drawing Title: i.MX28 Home Health Hub
Page Title: CPU - ETH - DUART
Size C
Document Number SCH-XXXXX PDF: SPF-XXXXX
Rev 1.0
Date: Wednesday, April 11, 2012
Sheet 6 of 17

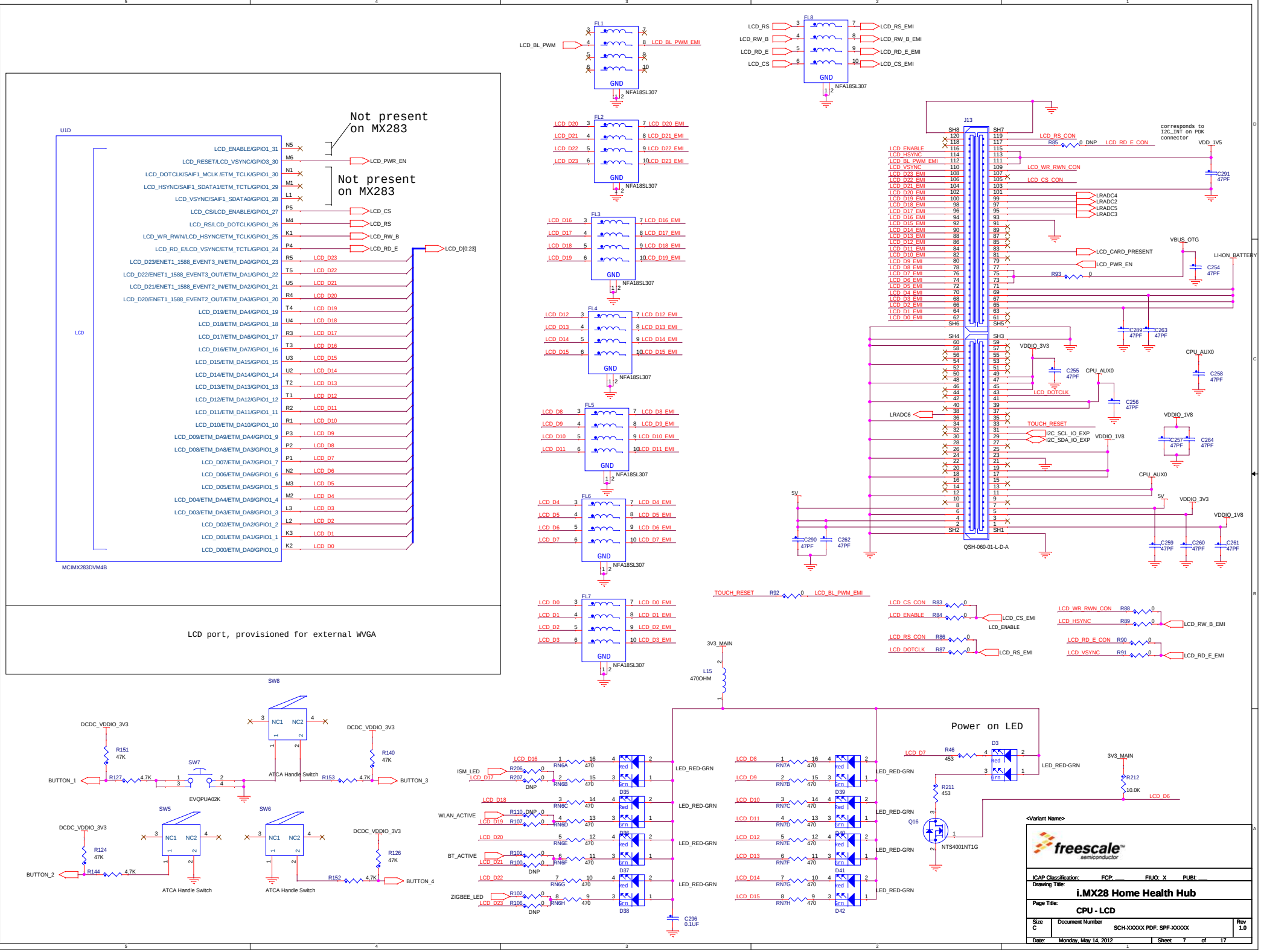
U1D
LCD
MCIMX283DVM4B
Not present on MX283
Not present on MX283
LCD_ENABLE/GPIO1_31
LCD_RESET/LCD_VSYNC/GPIO3_30
LCD_DOTCLK/SAIF1_MCLK /ETM_TCLK/GPIO1_30
LCD_HSYNC/SAIF1_SDATA1/ETM_TCTL/GPIO1_29
LCD_VSYNC/SAIF1_SDATA0/GPIO1_28
LCD_CS/LCD_ENABLE/GPIO1_27
LCD_RS/LCD_DOTCLK/GPIO1_26
LCD_WR_RWN/LCD_HSYNC/ETM_TCLK/GPIO1_25
LCD_RD_E/LCD_VSYNC/ETM_TCTL/GPIO1_24
LCD_D23/ENET1_1588_EVENT3_IN/ETM_DA0/GPIO1_23
LCD_D22/ENET1_1588_EVENT3_OUT/ETM_DA1/GPIO1_22
LCD_D21/ENET1_1588_EVENT2_IN/ETM_DA2/GPIO1_21
LCD_D20/ENET1_1588_EVENT2_OUT/ETM_DA3/GPIO1_20
LCD_D19/ETM_DA4/GPIO1_19
LCD_D18/ETM_DA5/GPIO1_18
LCD_D17/ETM_DA6/GPIO1_17
LCD_D16/ETM_DA7/GPIO1_16
LCD_D15/ETM_DA15/GPIO1_15
LCD_D14/ETM_DA14/GPIO1_14
LCD_D13/ETM_DA13/GPIO1_13
LCD_D12/ETM_DA12/GPIO1_12
LCD_D11/ETM_DA11/GPIO1_11
LCD_D10/ETM_DA10/GPIO1_10
LCD_D09/ETM_DA9/ETM_DA4/GPIO1_9
LCD_D08/ETM_DA8/ETM_DA3/GPIO1_8
LCD_D07/ETM_DA7/GPIO1_7
LCD_D06/ETM_DA6/GPIO1_6
LCD_D05/ETM_DA5/GPIO1_5
LCD_D04/ETM_DA4/ETM_DA9/GPIO1_4
LCD_D03/ETM_DA3/ETM_DA8/GPIO1_3
LCD_D02/ETM_DA2/GPIO1_2
LCD_D01/ETM_DA1/GPIO1_1
LCD_D00/ETM_DA0/GPIO1_0
LCD_PWR_EN
LCD_CS
LCD_RS
LCD_RW_B
LCD_RD_E
LCD_D[0:23]
LCD port, provisioned for external WVGA
FL1
LCD_BL_PWM
LCD_BL_PWM_EMI
FL8
LCD_RS
LCD_RW_B
LCD_RD_E
LCD_CS
LCD_RS_EMI
LCD_RW_B_EMI
LCD_RD_E_EMI
LCD_CS_EMI
FL2
FL3
FL4
FL5
FL6
FL7
GND
NFA18SL307
J13
QSH-060-01-L-D-A
LCD_RS_CON
R85
0 DNP
LCD_RD_E_CON
corresponds to I2C_INT on PDK connector
VDD_1V5
C291 47PF
LCD_WR_RWN_CON
LCD_CS_CON
LRADC4
LRADC2
LRADC5
LRADC3
LCD_CARD_PRESENT
LCD_PWR_EN
R93
VBUS_OTG
LI-ION_BATTERY
C254 47PF
C289 47PF
C263 47PF
VDDIO_3V3
C255 47PF
CPU_AUX0
C258 47PF
LCD_DOTCLK
C256 47PF
LRADC6
TOUCH_RESET
I2C_SCL_IO_EXP
I2C_SDA_IO_EXP
VDDIO_1V8
C257 47PF
C264 47PF
5V
C290 47PF
C262 47PF
C259 47PF
C260 47PF
C261 47PF
TOUCH_RESET
R92
0
LCD_BL_PWM_EMI
LCD_CS_CON
R83
LCD_ENABLE
R84
LCD_CS_EMI
LCD_ENABLE
LCD_WR_RWN_CON
R88
LCD_HSYNC
R89
LCD_RW_B_EMI
LCD_RS_CON
R86
LCD_DOTCLK
R87
LCD_RS_EMI
LCD_RD_E_CON
R90
LCD_VSYNC
R91
LCD_RD_E_EMI
3V3_MAIN
L15
470OHM
SW8
NC1
NC2
DCDC_VDDIO_3V3
R151 47K
R140 47K
BUTTON_1
R127
4.7K
SW7
EVQPUA02K
ATCA Handle Switch
R153
BUTTON_3
SW5
SW6
R124 47K
R126 47K
BUTTON_2
R144
R152
BUTTON_4
ISM_LED
LCD_D16
LCD_D17
R206
R207
DNP
RN6A
RN6B
D35
WLAN_ACTIVE
LCD_D18
LCD_D19
R110
R107
RN6C
RN6D
D36
BT_ACTIVE
LCD_D20
LCD_D21
R101
R100
RN6E
RN6F
D37
ZIGBEE_LED
LCD_D22
LCD_D23
R102
R106
RN6G
RN6H
D38
LED_RED-GRN
C296 0.1UF
LCD_D8
LCD_D9
LCD_D10
LCD_D11
LCD_D12
LCD_D13
LCD_D14
LCD_D15
RN7A
RN7B
RN7C
RN7D
RN7E
RN7F
RN7G
RN7H
D39
D40
D41
D42
Power on LED
LCD_D7
R46 453
D3
R211 453
Q16
NTS4001NT1G
3V3_MAIN
R212 10.0K
LCD_D6
<Variant Name>
freescale semiconductor
ICAP Classification:
FCP:
FIUO: X
PUBI:
Drawing Title:
i.MX28 Home Health Hub
Page Title:
CPU - LCD
Size C
Document Number
SCH-XXXXX PDF: SPF-XXXXX
Rev 1.0
Date: Monday, May 14, 2012
Sheet 7 of 17

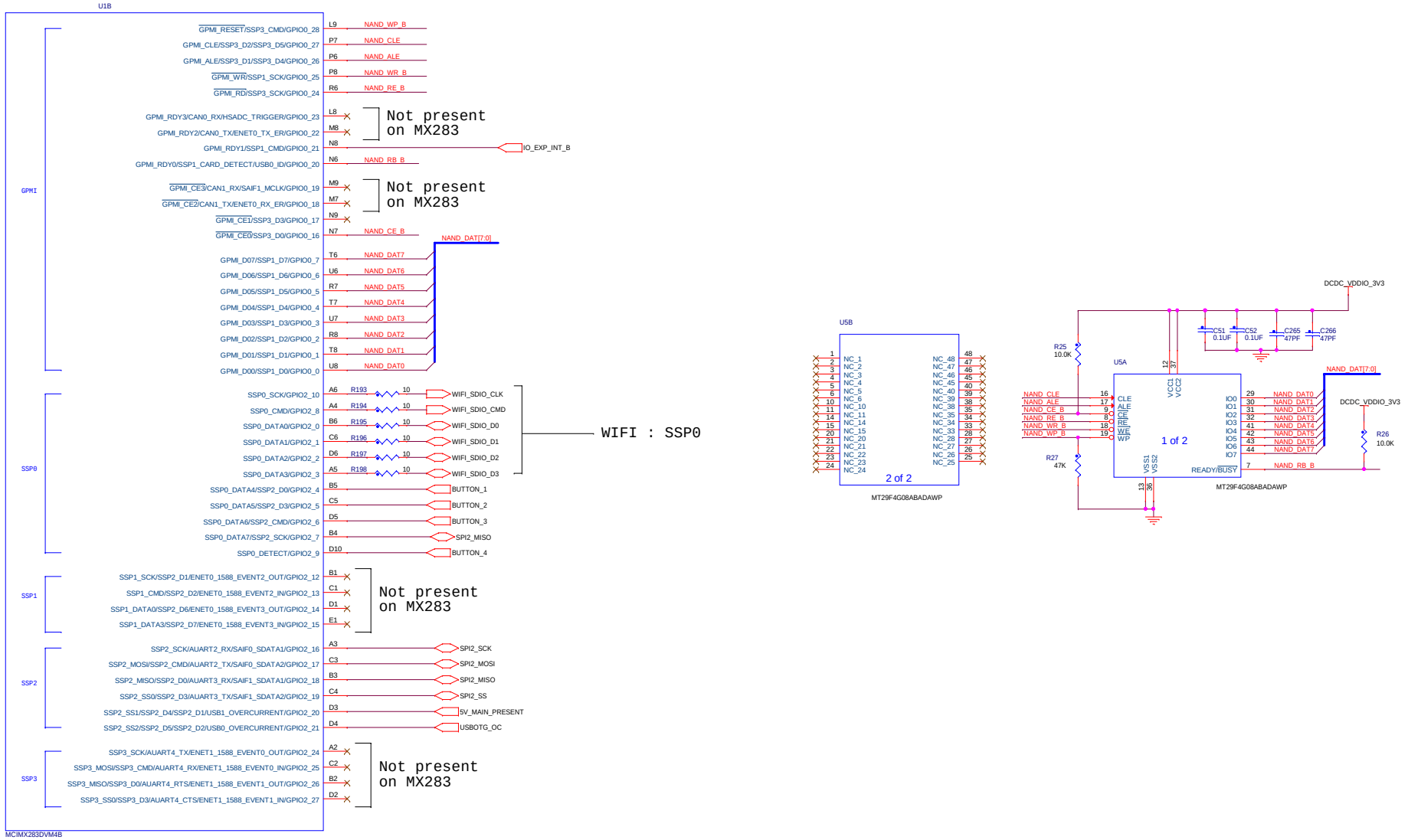

<Variant Name>

freescale semiconductor

ICAP Classification: FCP: ___ FIUO: X PUBI: ___

Drawing Title: **i.MX28 Home Health Hub**

Page Title: **CPU - NAND - SSPs**

Size	Document Number	Rev
C	SCH-XXXXX PDF: SPF-XXXXX	1.0

Date: Wednesday, April 11, 2012 Sheet 8 of 17

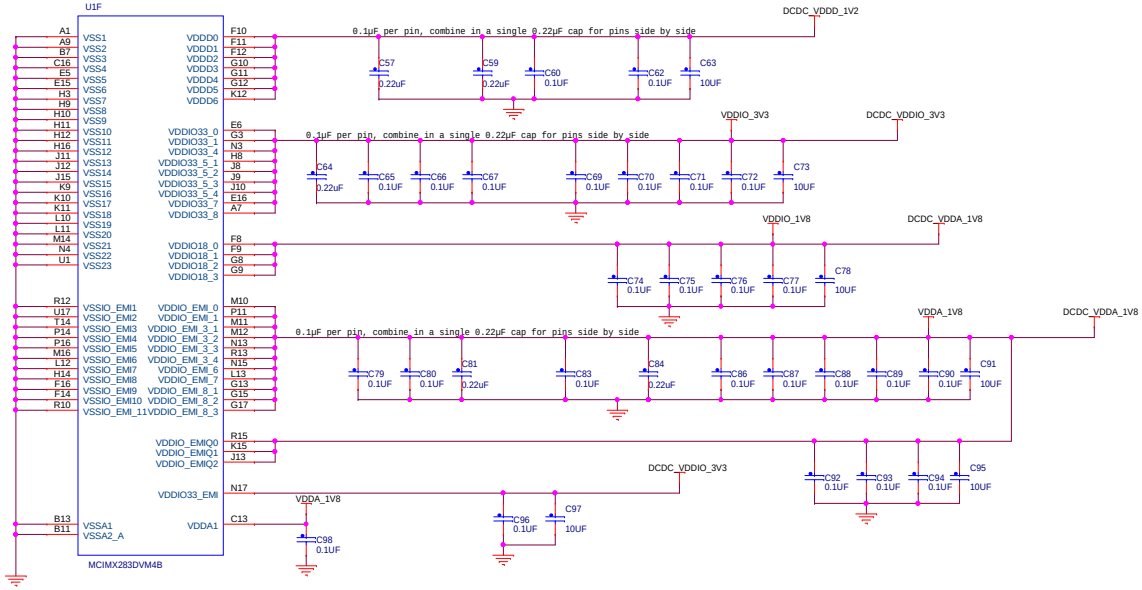

<Variant Name>

freescale semiconductor

ICAP Classification: FCP: ___ FIUO: X PUBI: ___

Drawing Title: **i.MX28 Home Health Hub**

Page Title: **CPU power supply**

Size	Document Number	Rev
C	SCH-XXXXX PDF: SPF-XXXXX	1.0

Date: Wednesday, April 11, 2012 Sheet 9 of 17

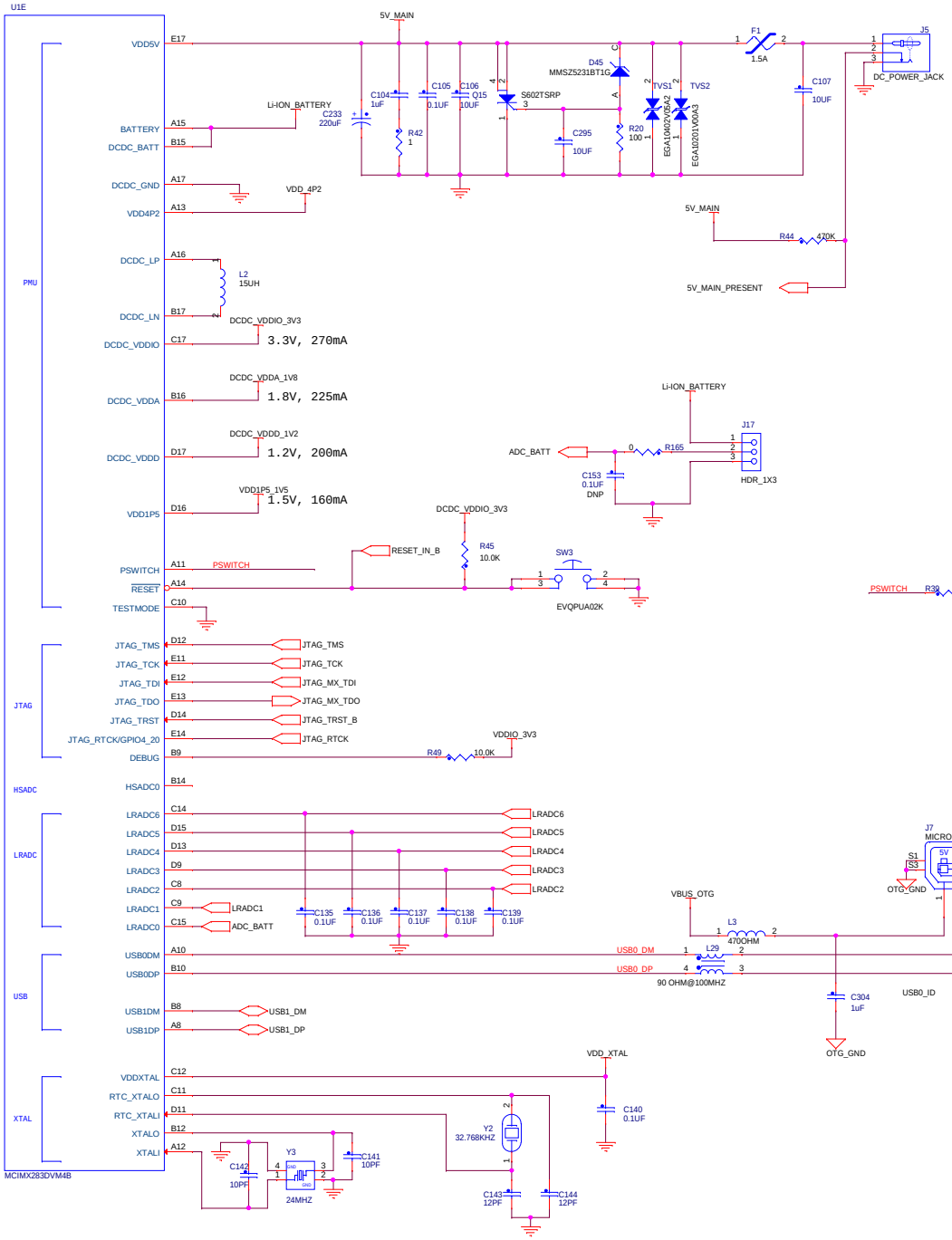

<Variant Name>

freescale semiconductor

ICAP Classification: FCP: ___ FIUO: X PUBI: ___

Drawing Title: **i.MX28 Home Health Hub**

Page Title: **CPU - DC/DC, JTAG**

Size	Document Number	Rev
C	SCH-XXXXX PDF: SPF-XXXXX	1.0

Date: Wednesday, April 11, 2012 Sheet 10 of 17

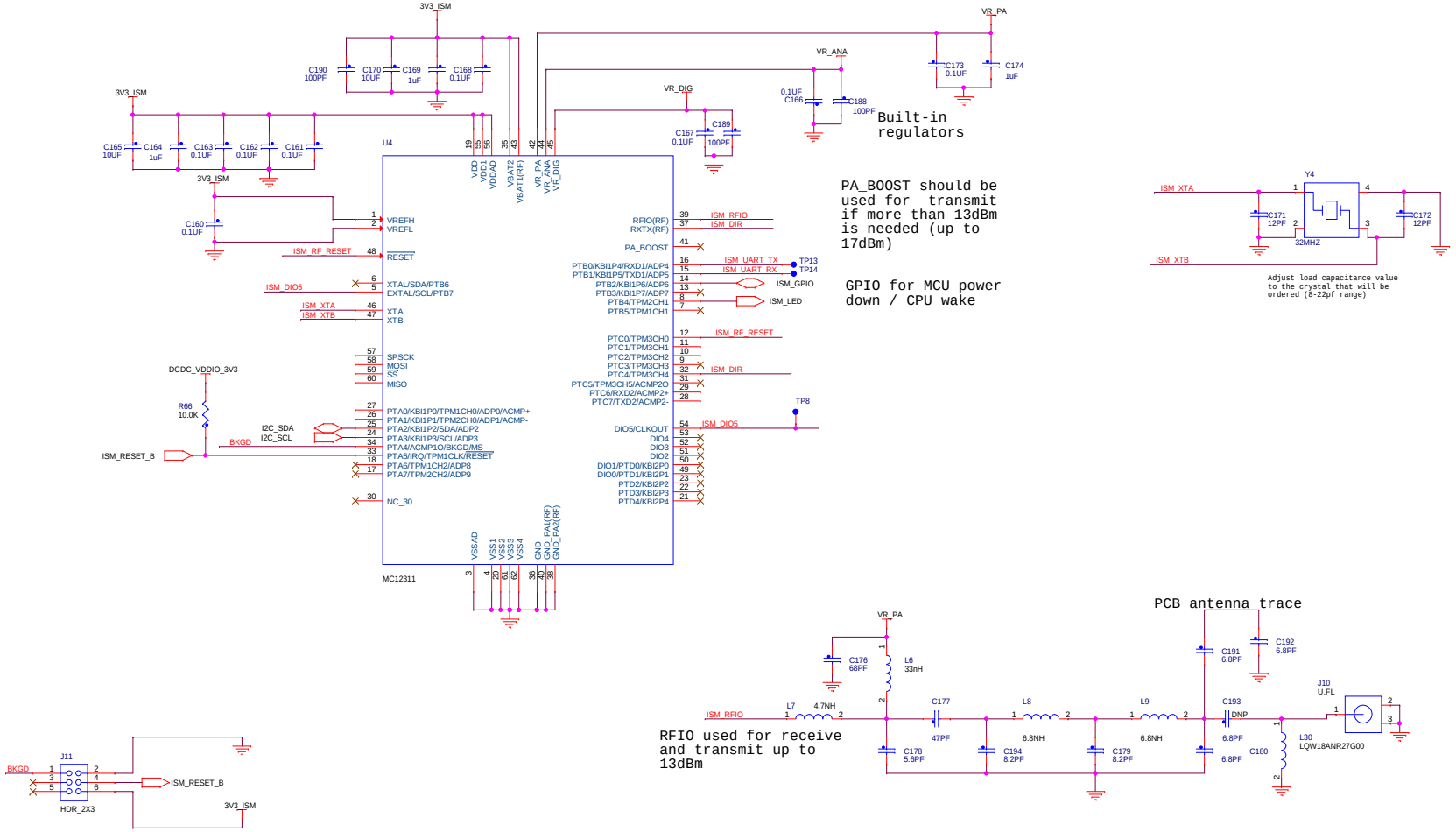

<Variant Name>

freescale semiconductor

ICAP Classification: FCP: ___ FIUO: X PUBI: ___

Drawing Title: **i.MX28 Home Health Hub**

Page Title: **ISM RF**

Size	Document Number	Rev
C	SCH-XXXXX PDF: SPF-XXXXX	1.0

Date: Wednesday, April 11, 2012 Sheet 11 of 17

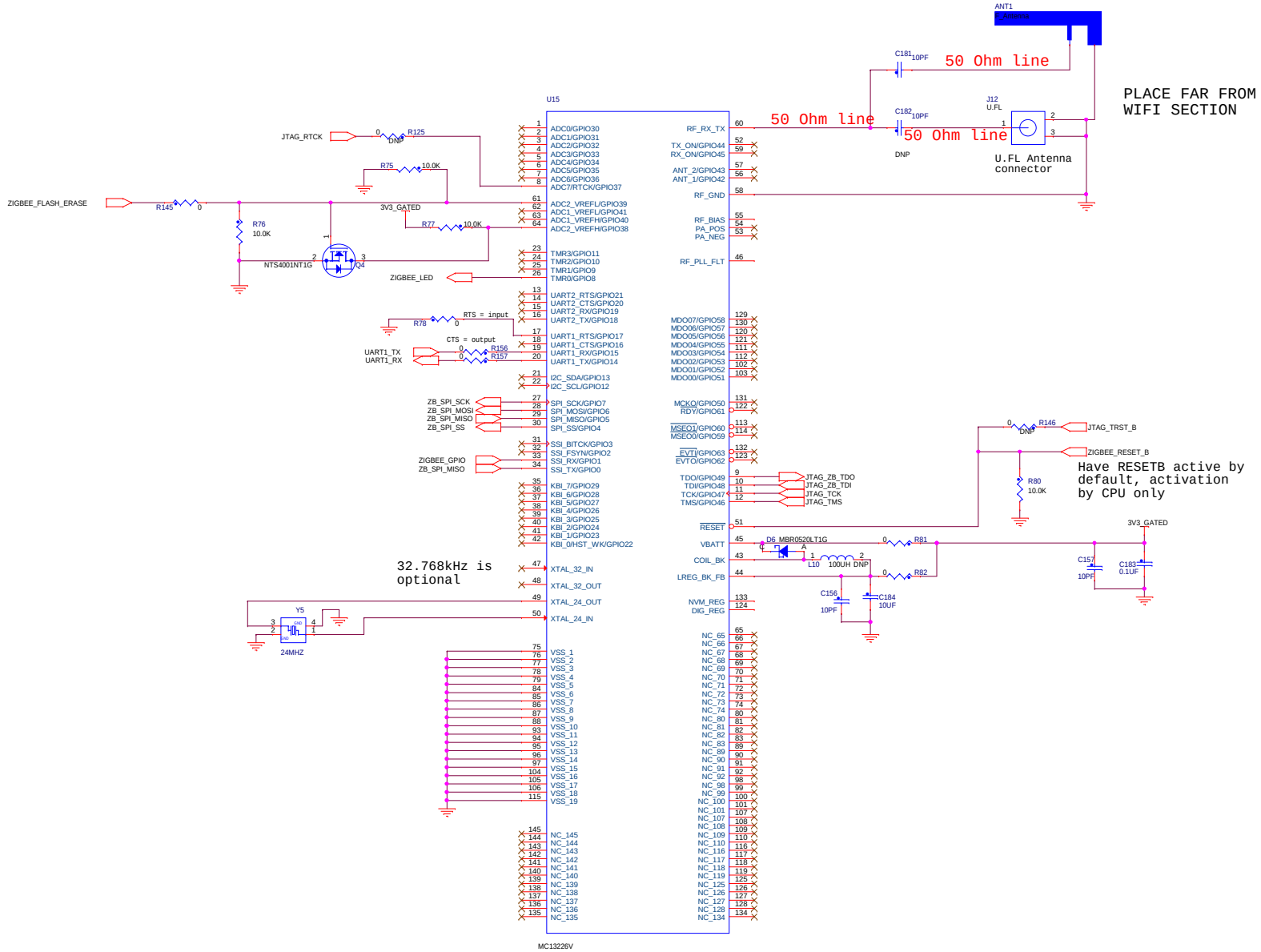

<Variant Name>

freescale semiconductor

ICAP Classification: FCP: ___ FIUO: X PUBI: ___

Drawing Title: **i.MX28 Home Health Hub**

Page Title: **ZigBee**

Size	Document Number	Rev
C	SCH-XXXXX PDF: SPF-XXXXX	1.0

Date: Wednesday, April 11, 2012 Sheet 12 of 17

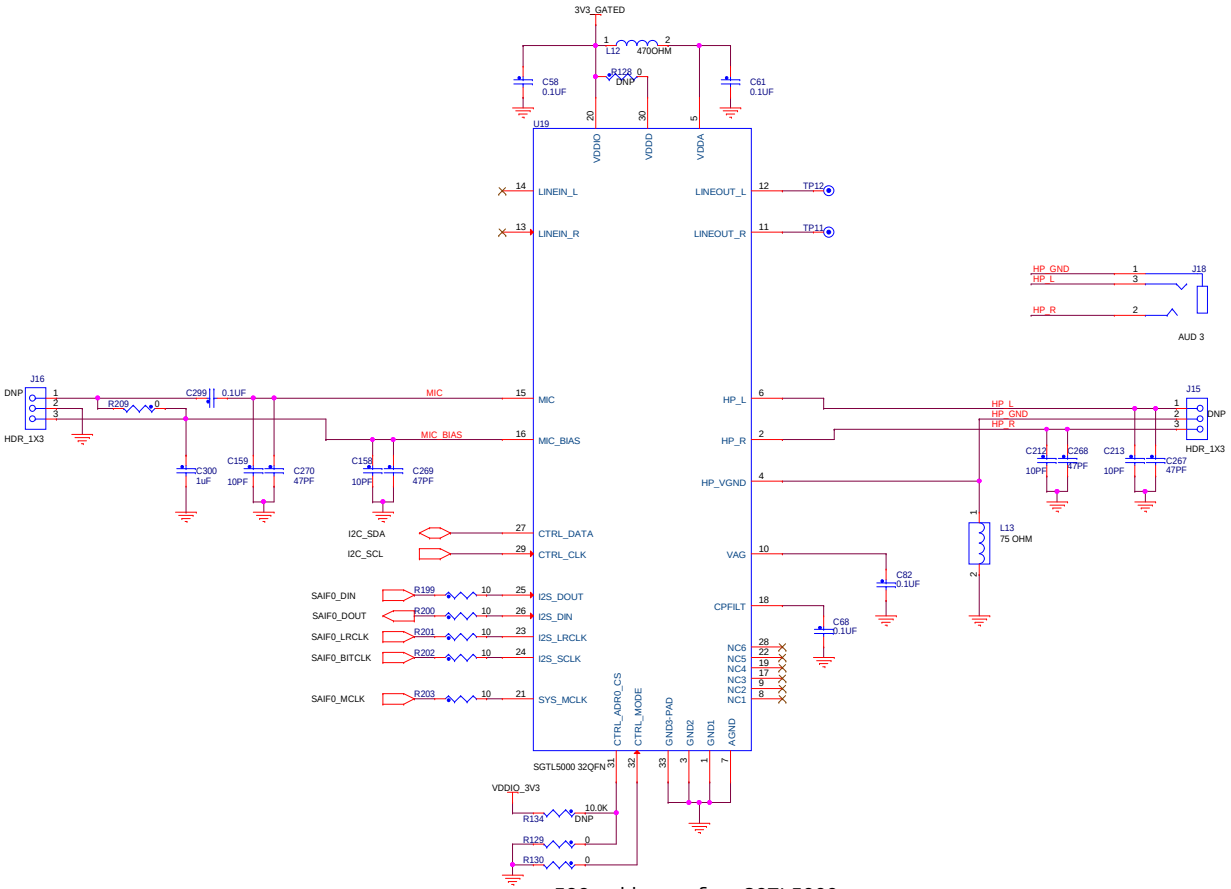


```
I2C address for SGTL5000
CTRL_ADR0_CS = 0 => I2C address 0x0A
CTRL_ADR0_CS = 1 => I2C address 0x2A
```

<Variant Name>

freescale semiconductor

ICAP Classification: FCP: ___ FIUO: X PUBI: ___

Drawing Title: **i.MX28 Home Health Hub**

Page Title: **Audio**

Size	Document Number	Rev
C	SCH-XXXXX PDF: SPF-XXXXX	1.0

Date: Wednesday, April 11, 2012 Sheet 13 of 17

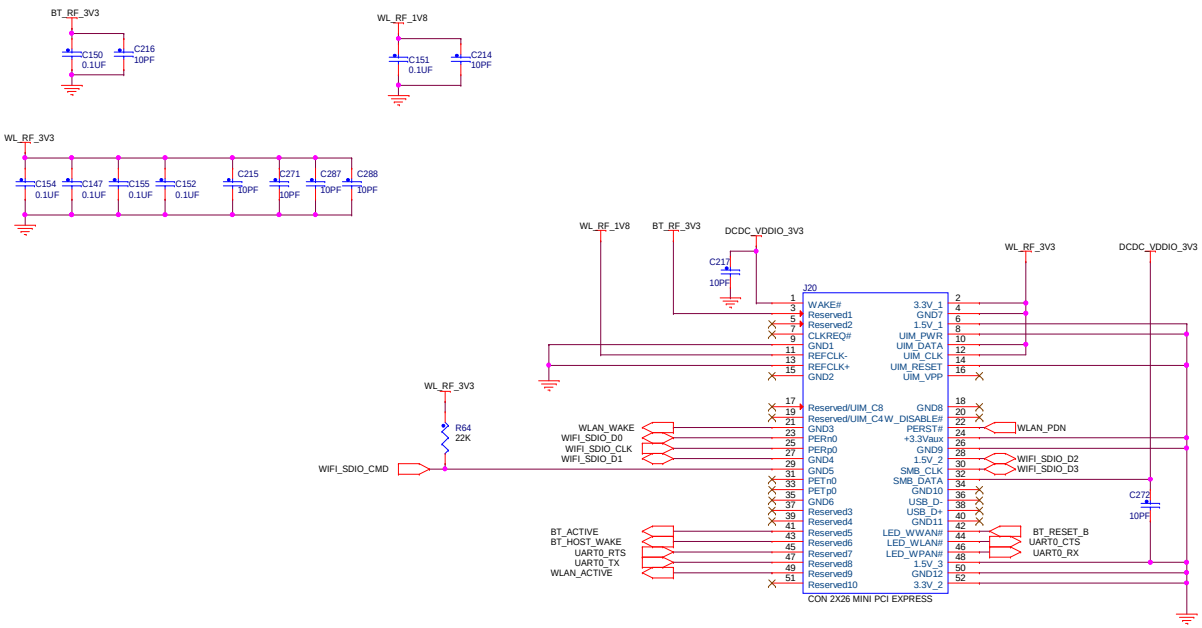

MiniPCIe card has u.FL connectors. place antennas on the PCB to connect with u.FL - u.FL cable and avoid having floating antennas.

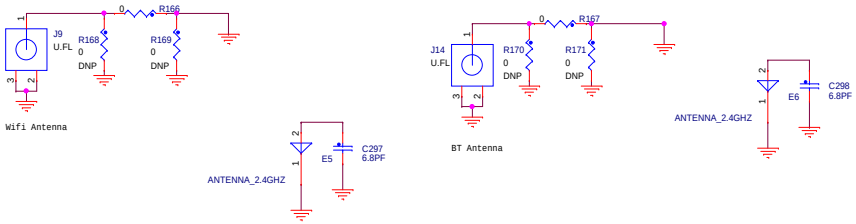

<Variant Name>

freescale semiconductor

ICAP Classification: FCP: ___ FIUO: X PUBI: ___

Drawing Title: **i.MX28 Home Health Hub**

Page Title: **BlueTooth - Wifi**

Size	Document Number	Rev
C	SCH-XXXXX PDF: SPF-XXXXX	1.0

Date: Wednesday, April 11, 2012 Sheet 14 of 17

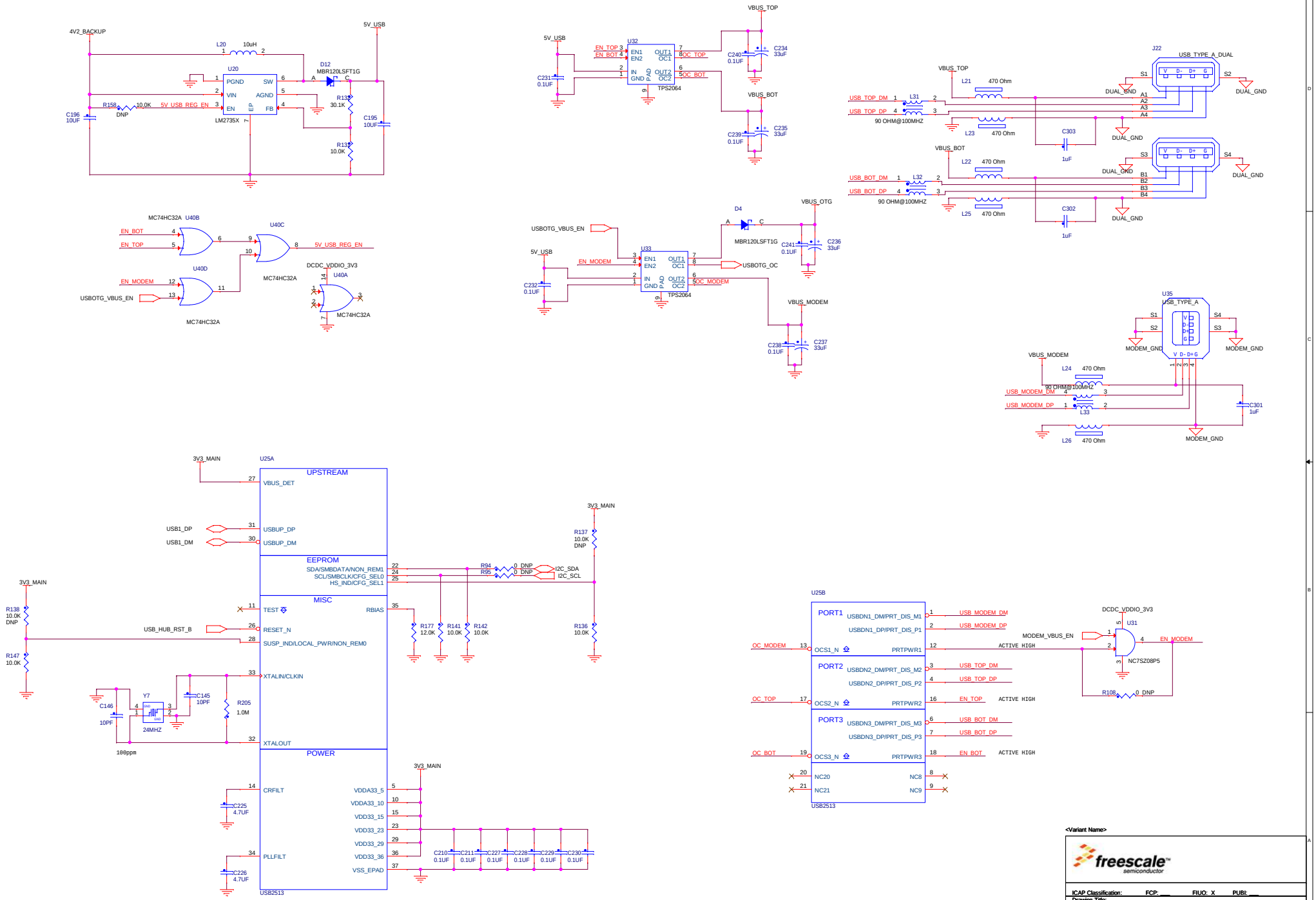

<Variant Name>

freescale semiconductor

ICAP Classification: FCP: ___ FIUO: X PUBI: ___

Drawing Title: **i.MX28 Home Health Hub**

Page Title: **USB Hub**

Size	Document Number	Rev
C	SCH-XXXXX PDF: SPF-XXXXX	1.0

Date: Wednesday, April 11, 2012 Sheet 15 of 17

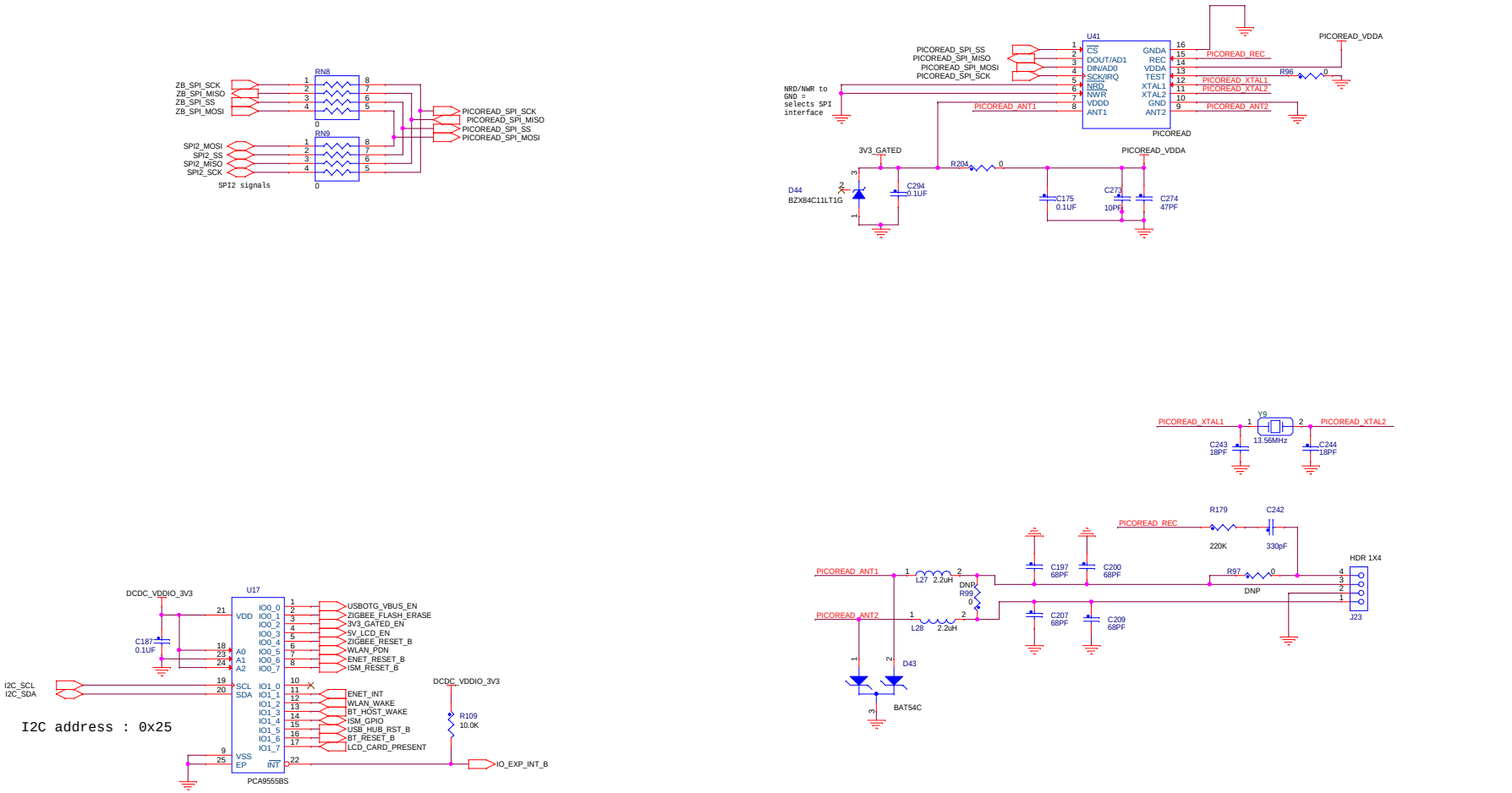

I2C address : 0x25

<Variant Name>

freescale semiconductor

ICAP Classification: FCP: ___ FIUO: X PUBI: ___

Drawing Title: **i.MX28 Home Health Hub**

Page Title: **NFC & IO expander**

Size	Document Number	Rev
C	SCH-XXXXX PDF: SPF-XXXXX	1.0

Date: Wednesday, April 11, 2012 Sheet 16 of 17

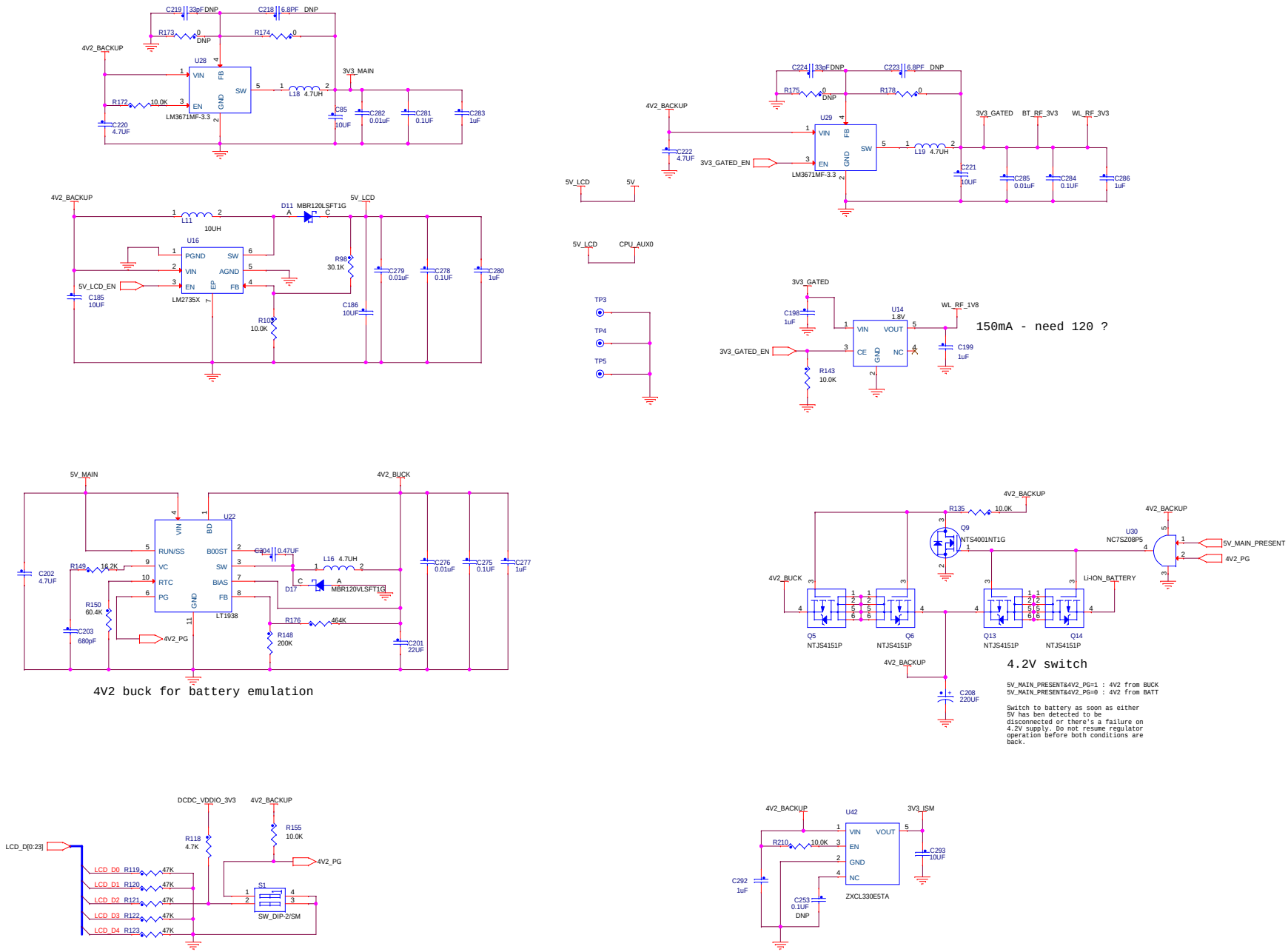

S1-1 ON : Force 4V2 from battery
S1-1 OFF : Auto select 4V2 power source. Mains if available, switch to battery if not

S1-2 ON : Boot from USB / recovery mode
S1-2 OFF : Boot from NAND if available

<Variant Name>

freescale semiconductor

ICAP Classification: FCP: ___ FIUO: X PUBI: ___

Drawing Title: **i.MX28 Home Health Hub**

Page Title: **Discrete power supply**

Size	Document Number	Rev
C	SCH-XXXXX PDF: SPF-XXXXX	1.0

Date: Wednesday, April 11, 2012 Sheet 17 of 17