ConnectCore for i.MX8M Nano DVK

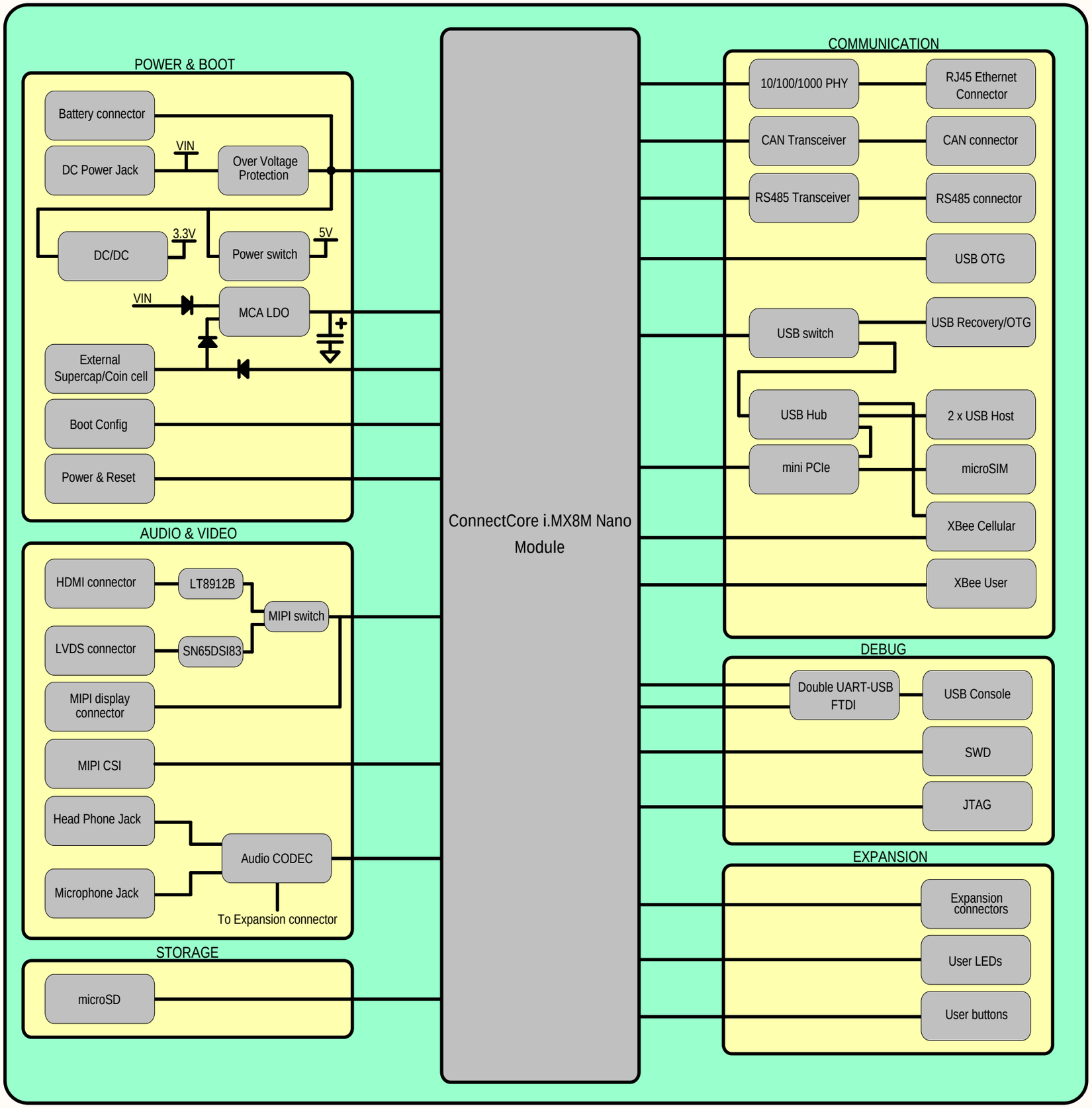

Table of Content

Page	Name
Page 1	Block Diagram
Page 2	Power Diagram
Page 3	Power, reset
Page 4	CCIMX8M Nano Power, Control, MCA
Page 5	CCIMX8M Nano Digital interfaces
Page 6	CCIMX8M Nano RF, PCIe
Page 7	Bootstrap
Page 8	Consoles
Page 9	JTAG, SWD, uSD, Mini PCIe, uSIM
Page 10	RS485, CAN
Page 11	Ethernet
Page 12	MIPI display and switch, MIPI camera
Page 13	MIPI to HDMI bridge
Page 14	MIPI to LVDS bridge
Page 15	USB HUB
Page 16	USB Recovery, USB OTG
Page 17	Audio
Page 18	I2C, XBee
Page 19	Expansion connectors, User LEDs, RF signals
Page 20	GPIO table, System power rails
Page 21	History, Mechanicals

Title: Block Diagram		
Designer: Juan Anzola	Sheet: 1 of 21	
Variant: 55002060-01	Rev: 3P	
Description: ConnectCore i.MX8 8M Development board		

Power architecture diagram

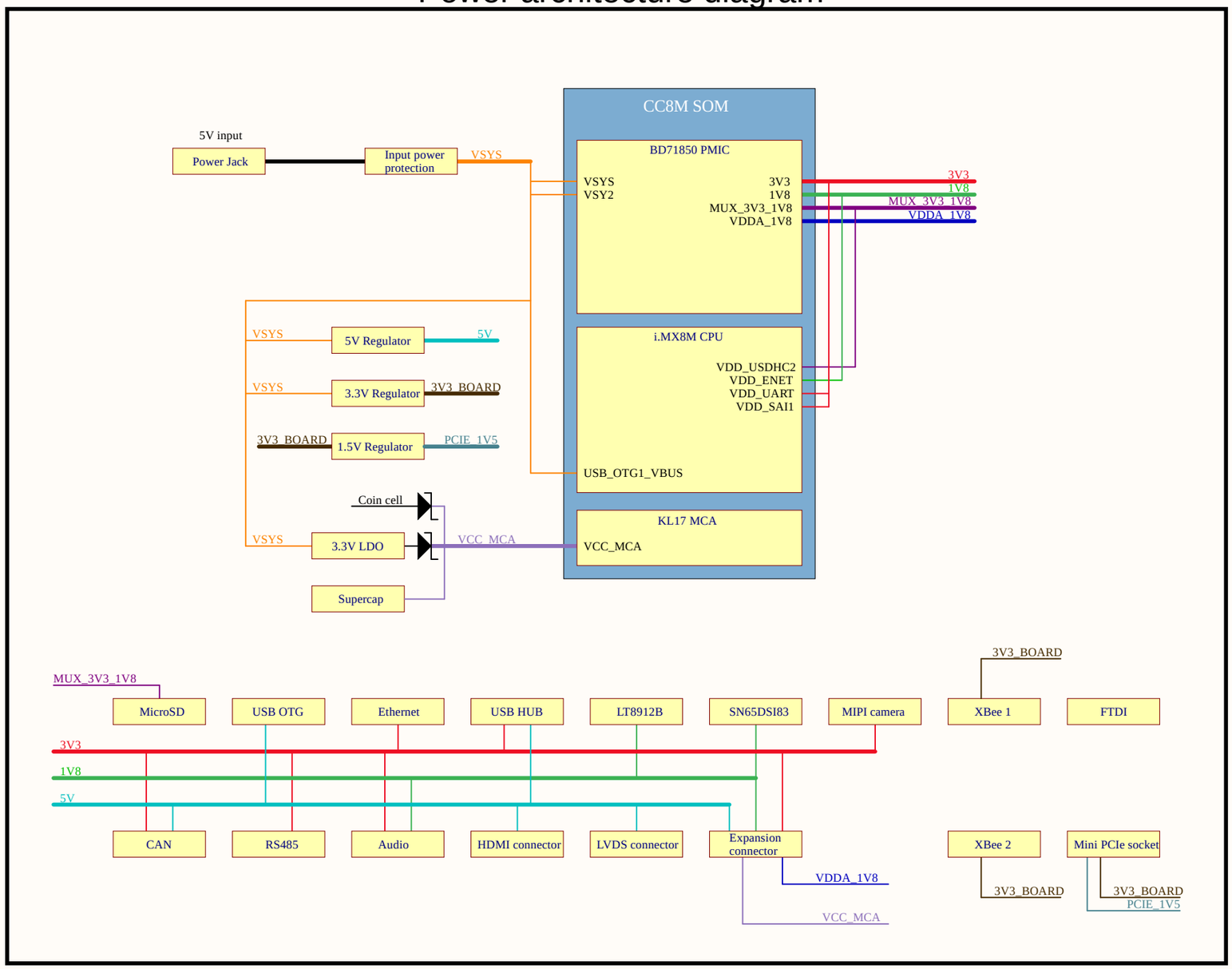

Title: Power Diagram		
Designer: Juan Anzola	Sheet: 2 of 21	
Variant: 55002060-01	Rev: 3P	
Description: ConnectCore i.MX8 8M Development board		

Power and Reset

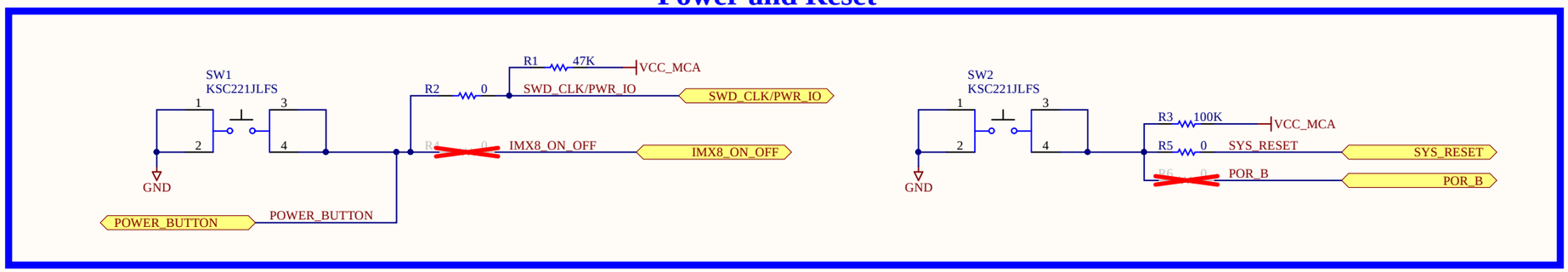

Supply Inputs

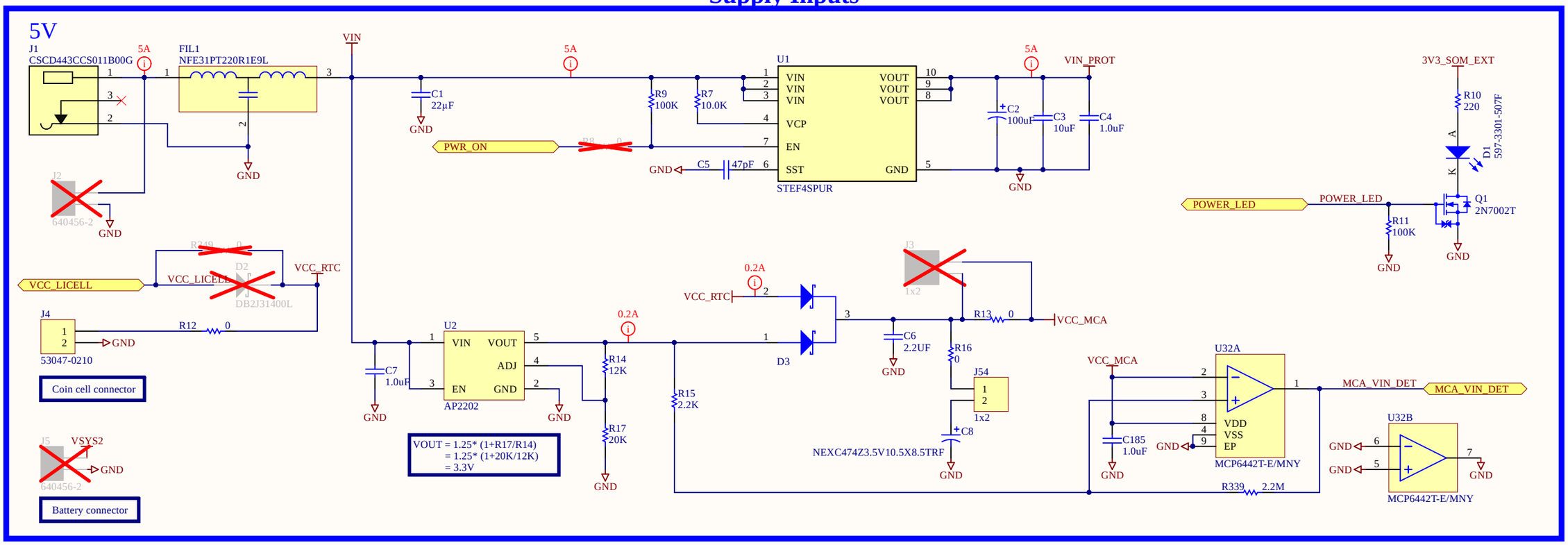

3.3V On board regulator

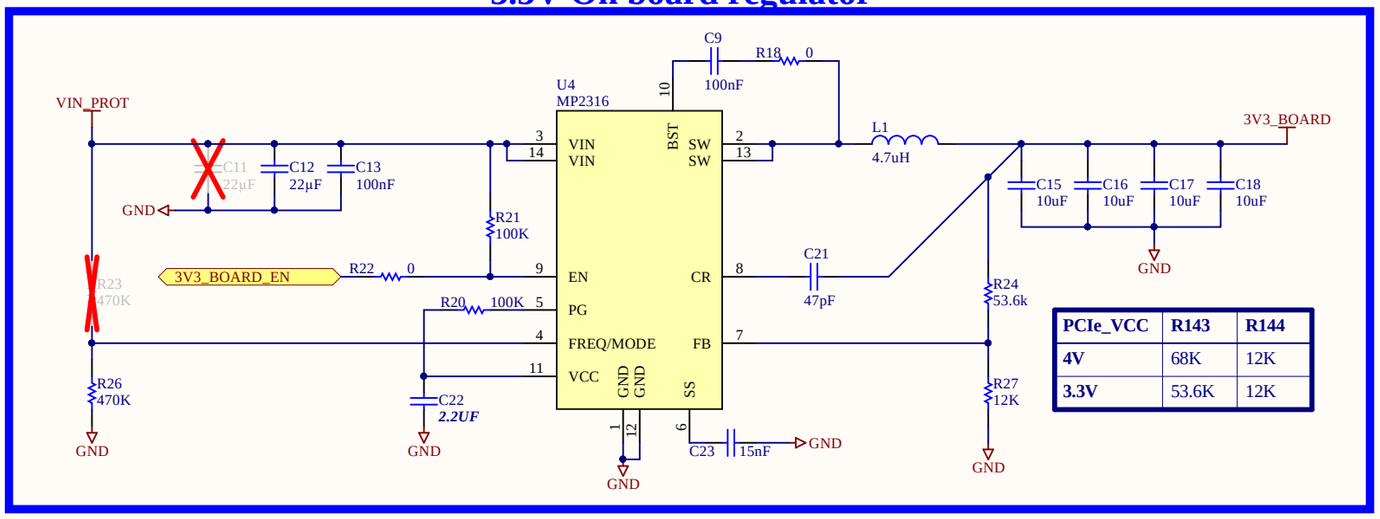

PCIe_VCC	R143	R144
4V	68K	12K
3.3V	53.6K	12K

5V Load switch

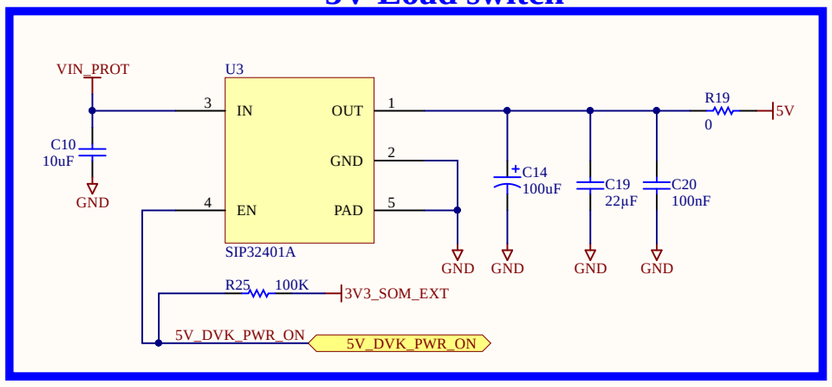

Title: Power, reset	
Designer: Juan Anzola	Sheet: 3 of 21
Variant: 55002060-01	Rev: 3P
Description: ConnectCore i.MX8 8M Development board	

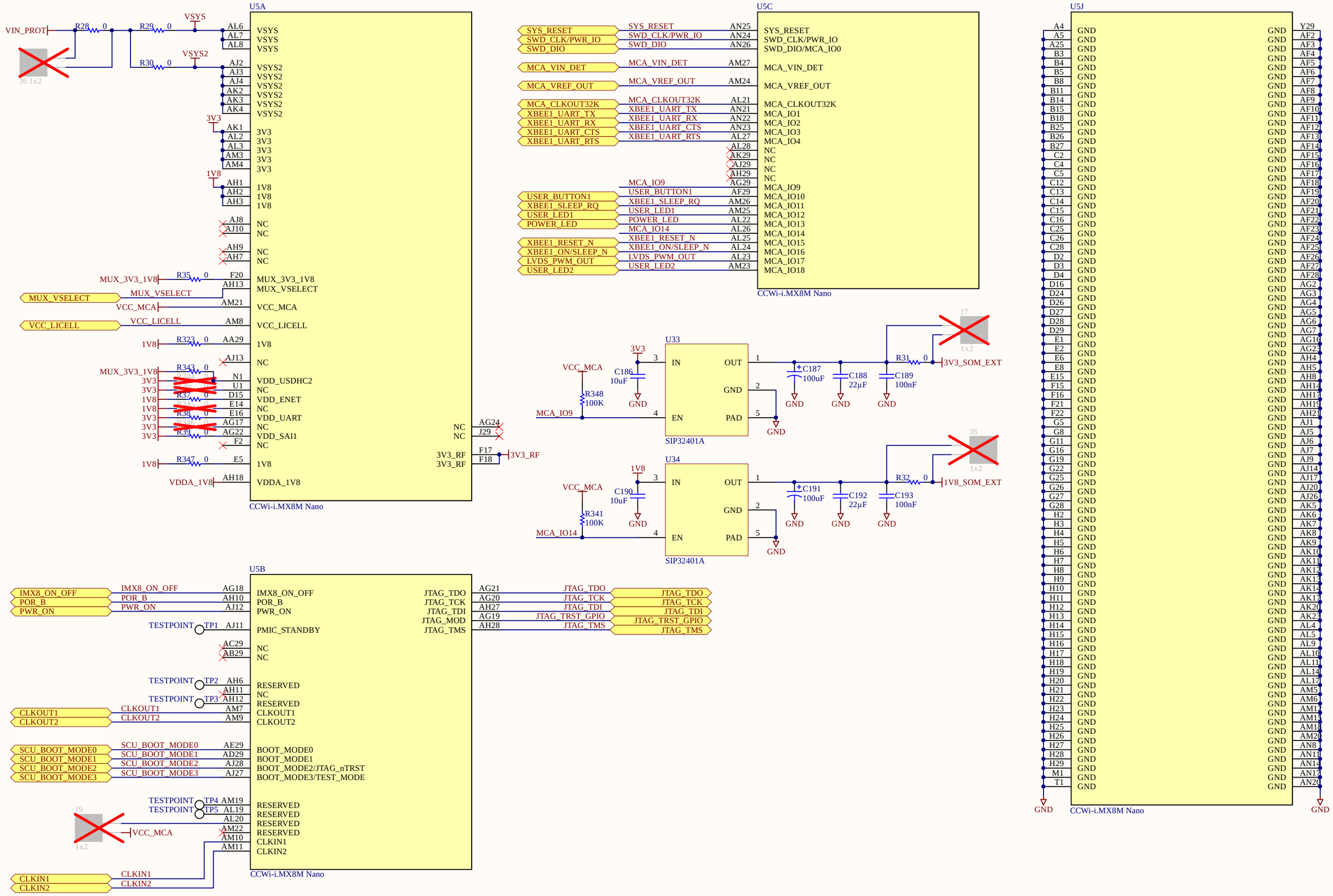

Title: CCIMX8M Nano Power, Control, MCA	
Designer: Juan Anzola	Sheet: 4 of 21
Variant: 55002060-01	Rev: 3P
Description: ConnectCore i.MX8 8M Development board	

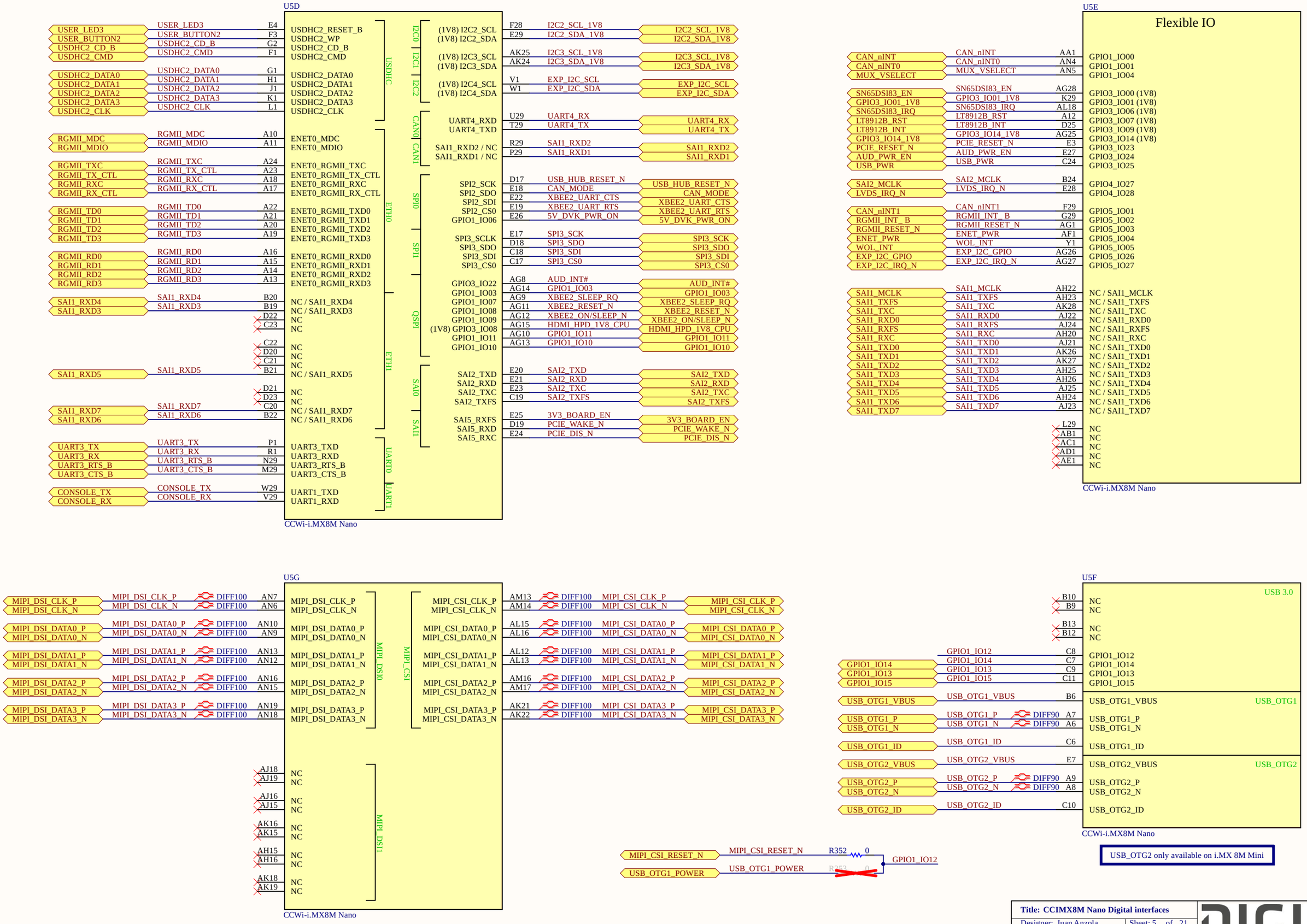

Title: CCIMX8M Nano Digital interfaces	
Designer: Juan Anzola	Sheet: 5 of 21
Variant: 55002060-01	Rev: 3P
Description: ConnectCore i.MX8 8M Development board	

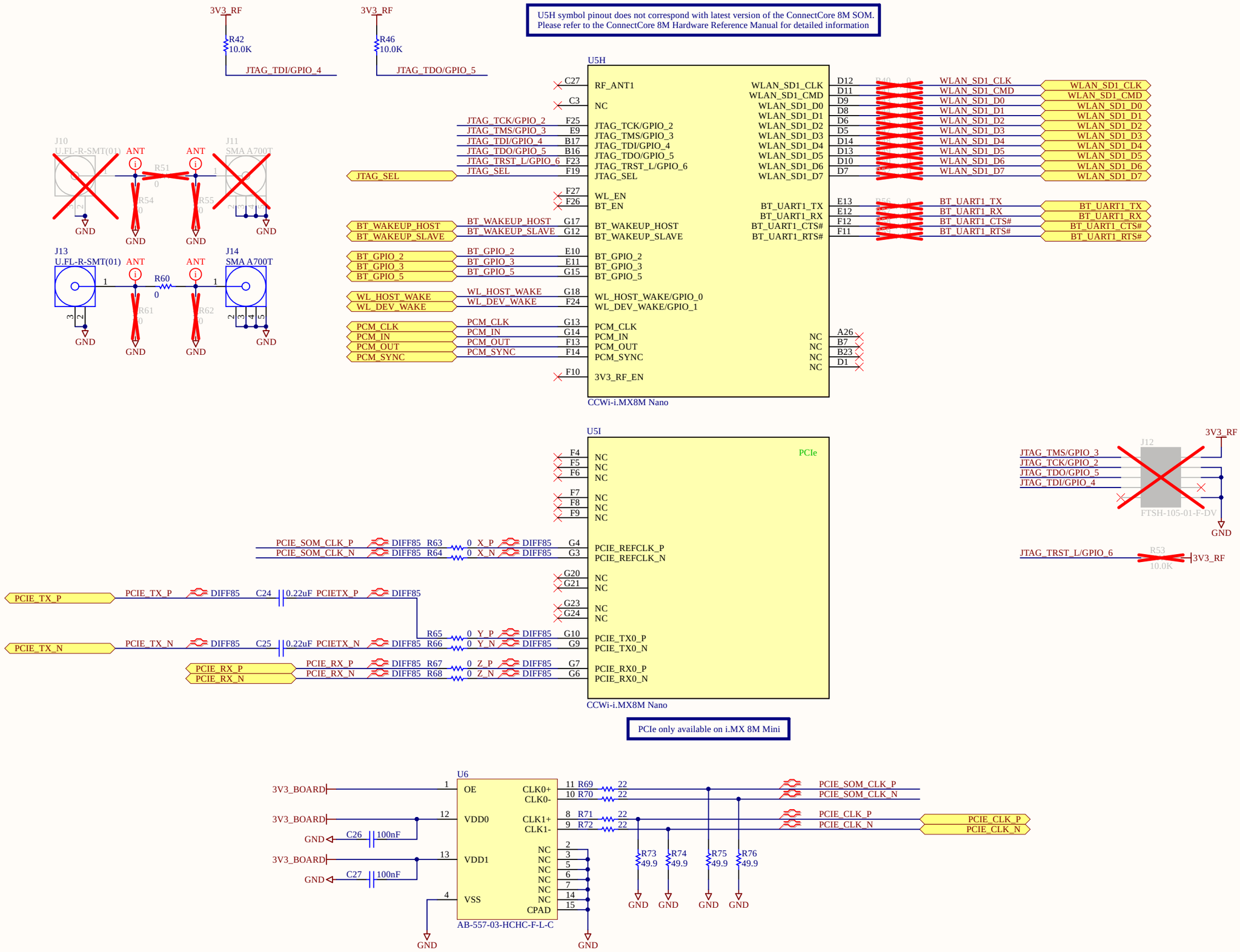

Title: CCIMX8M Nano RF, PCIe	
Designer: Juan Anzola	Sheet: 6 of 21
Variant: 55002060-01	Rev: 3P
Description: ConnectCore i.MX8 8M Development board	

Boot Mode

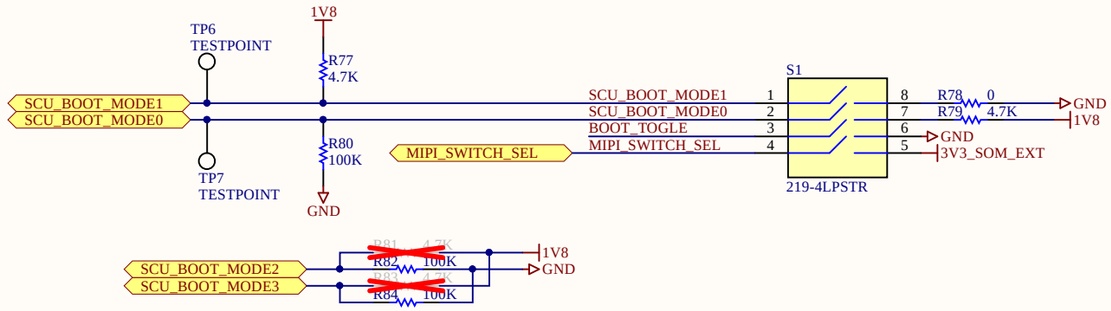

SW1.4	SW1.3	SW1.2	SW1.1	Description
-	Open	Open	Open	Boot from eMMC0
-	Close	Close	Open	Boot from microSD
-	-	Open	Close	Boot from Fuses
-	-	Close	Close	Serial downloader
Open	-	-	-	MIPI connected to HDMI
Close	-	-	-	MIPI connected to LVDS

SW1.3 only required for CC8M Mini

i.MX 8M Mini bootstrap

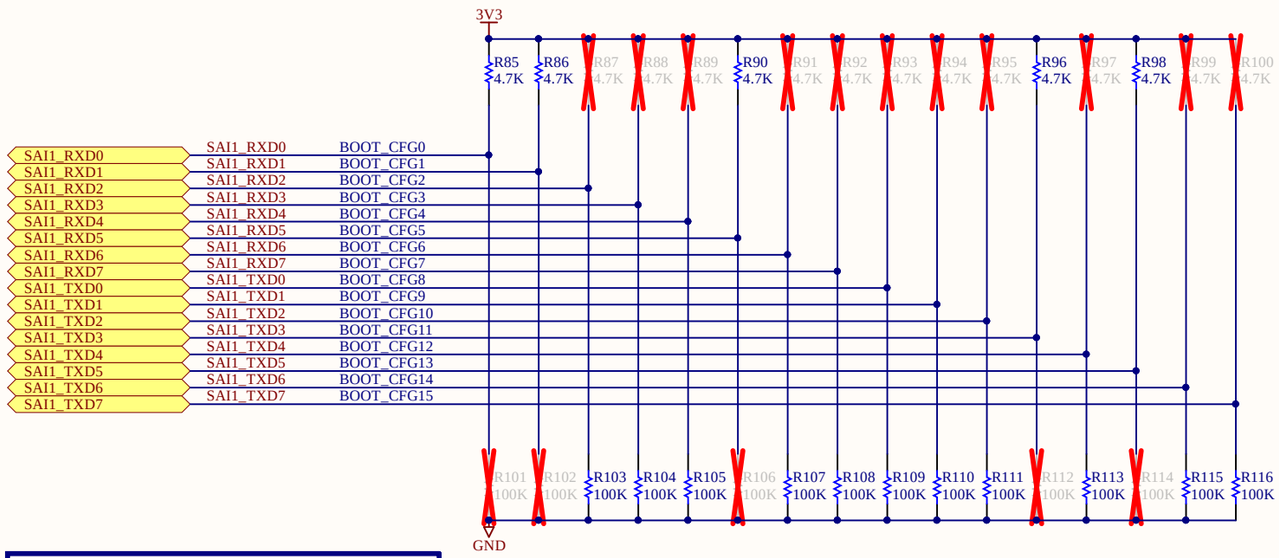

BOOT_CFG[1,2,5,6,11,13] have internal 10K pull-up in the SOM.

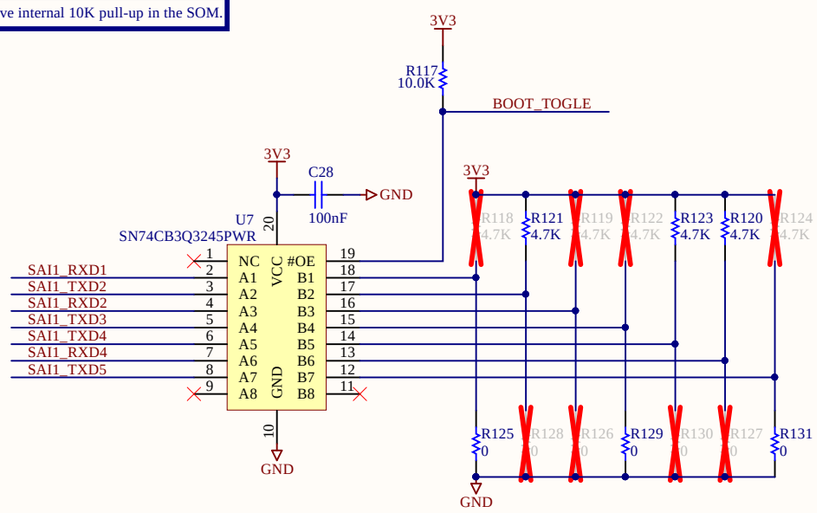

BOOT_CFG[15]	BOOT_CFG[14]	BOOT_CFG[13]	BOOT_CFG[12]	BOOT_CFG[11]	BOOT_CFG[10]	BOOT_CFG[9]	BOOT_CFG[8]
Infinity loop (Debug USE only) 0 - Disable 1 - Enable	001 - SD/eSD			Port Select: 00 - uSDHC1 01 - uSDHC2 10 - uSDHC3		Power Cycle Enable: 0 - No Power Cycle 1 - Enabled via	SD Loopback Clock Source Sel (for SDR50 and SDR104 only): 0 - through SD pad 1 - direct
	010 - MMC/eMMC						
	011 - NAND			Pages In Block: 00 - 128 01 - 64 10 - 32 11 - 256		Nand_Row_address_bytes: 00 - 3 01 - 2 10 - 4 11 - 5	
	100 - QSPI			Flash Auto Probe	FLASH_TYPE: 000 - Device supports 3B read by default 001 - Device supports 4B read by default 010 - HyperFlash 1V8 011 - HyperFlash 3V3 100 - MXIC Octal DDR		
	110 - SPI NOR			Port Select 000 - eCSPI1 001 - eCSPI2 010 - eCSPI3		SPI Addressing: 0 - 3-bytes (24-bit) 1 - 2-bytes (16-bit)	

	BOOT_CFG[7]	BOOT_CFG[6]	BOOT_CFG[5]	BOOT_CFG[4]	BOOT_CFG[3]	BOOT_CFG[2]	BOOT_CFG[1]	BOOT_CFG[0]
SD/eSD	Fast Boot: 0 - Regular 1 - Fast Boot	Reserved	Reserved	Bus Width: 0 - 1-bit 1 - 4-bit	Speed 000 - Normal/SDR12 001 - High/SDR25 010 - SDR50 011 - SDR104 101 - Reserved for DDR50 Others - Reserved			Reserved
MMC/eMMC		Bus Width 000 - 1-bit 001 - 4-bit 010 - 8-bit 101 - 4-bit DDR (MMC 4.4) 110 - 8-bit DDR (MMC 4.4) Else - Reserved			Speed: 00 - Normal 01 - High 10 - Reserved for HS200 11 - Reserved		USDHC IO VOLTAGE SELECTION For Normal Boot Mode 0 - 3.3V 1 - 1.8V	USDHC IO VOLTAGE SELECTION For Manufacture Mode 0 - 3.3V 1 - 1.8V
NAND	BT_TOGGLEMODE	BOOT_SEARCH_COUNT: 00 - 2 01 - 2 10 - 4 11 - 8		Toggle Mode 33MHz Preamble Delay, Read Latency: 000 - 16 GPMICLK cycles 001 - 1 GPMICLK cycles 010 - 2 GPMICLK cycles 011 - 3 GPMICLK cycles 100 - 4 GPMICLK cycles 101 - 5 GPMICLK cycles 110 - 6 GPMICLK cycles 111 - 7 GPMICLK cycles 1111 - 15 GPMICLK cycles			Reserved
FlexSPI	HOLD TIME: 00 - 500us 01 - 1ms 10 - 3ms 11 - 10ms		FLASH Auto Probe Type		FLexSPI FLASH Dummy Cycle			
SPINOR	CS select SPI only: 00 - CS#0 default 01 - CS#1 10 - CS#2 11 - CS#3	Reserved	Reserved	Reserved	Reserved	Reserved	Reserved	Reserved

Title: Bootstrap	
Designer: Juan Anzola	Sheet: 7 of 21
Variant: 55002060-01	Rev: 3P
Description: ConnectCore i.MX8 8M Development board	

Console_ports

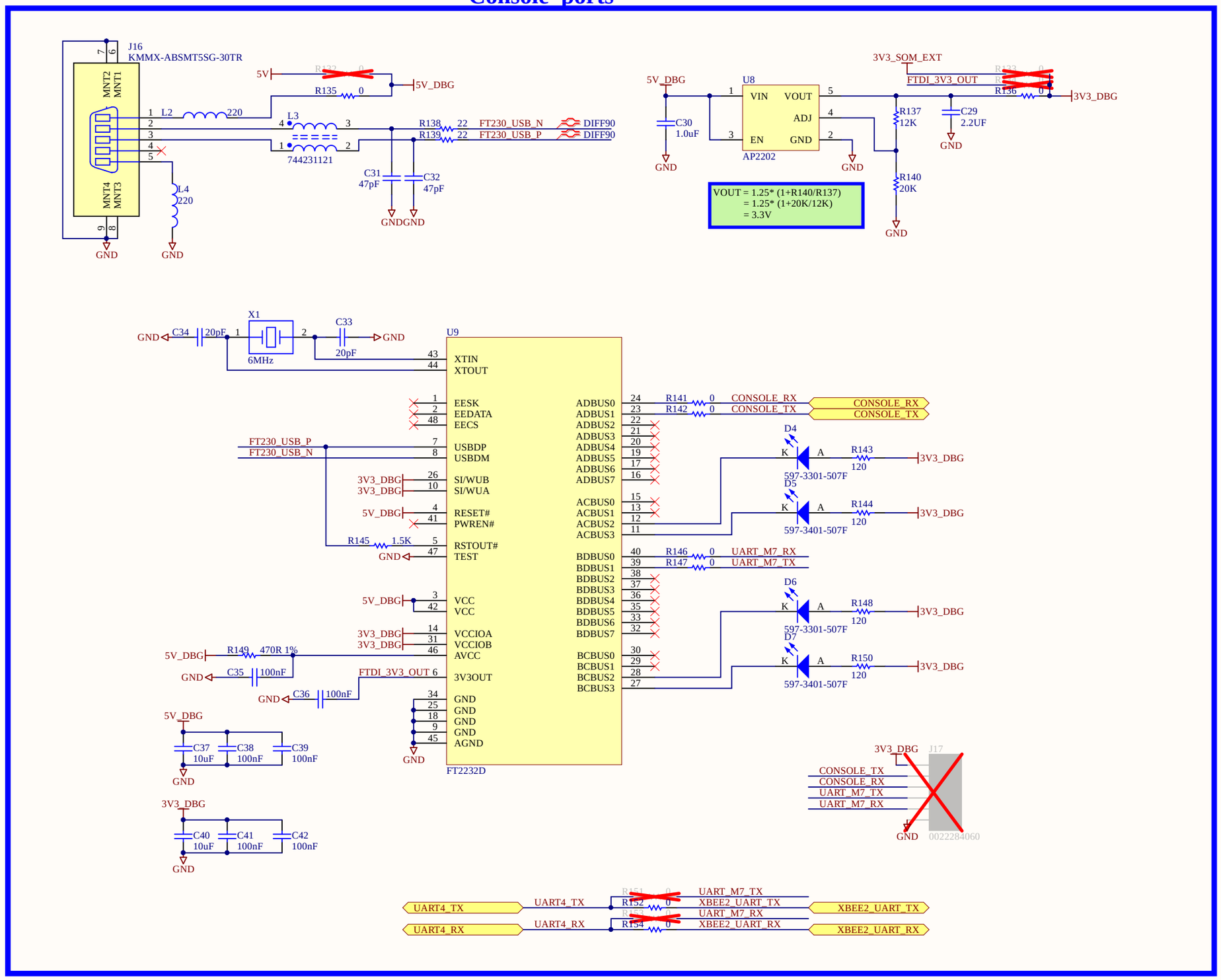

Title: Consoles	
Designer: Juan Anzola	Sheet: 8 of 21
Variant: 55002060-01	Rev: 3P
Description: ConnectCore i.MX8 8M Development board	

JTAG

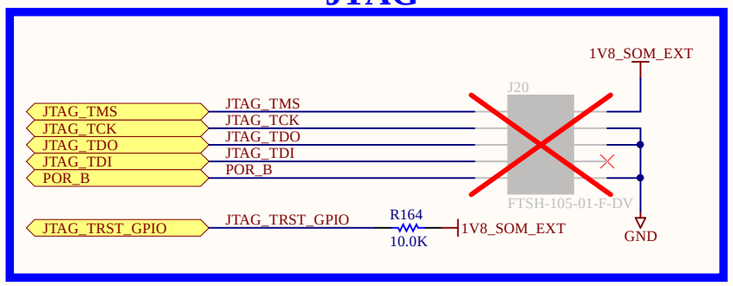

SWD

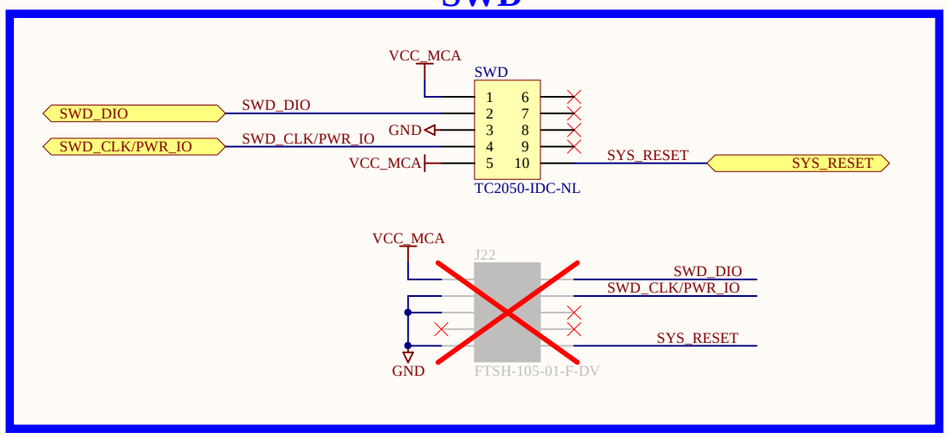

microSD

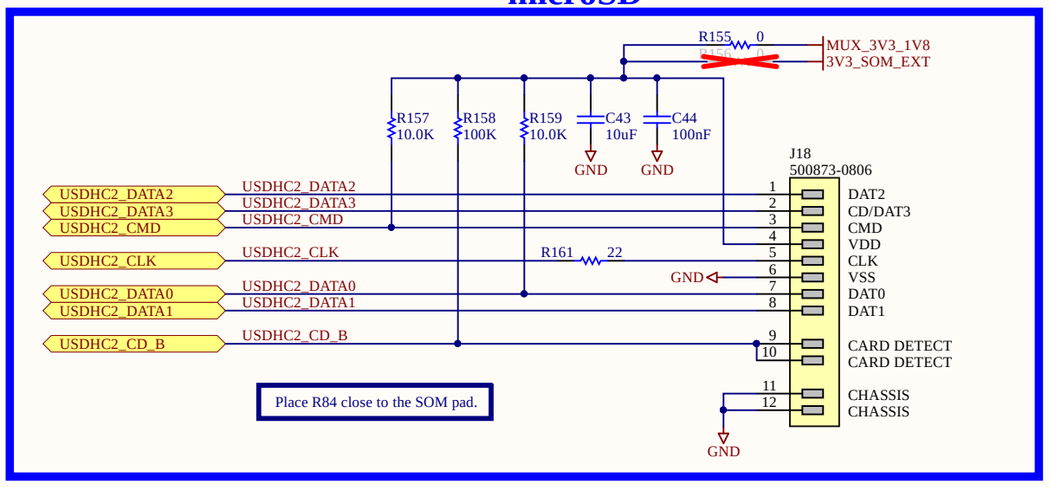

miniPCIe

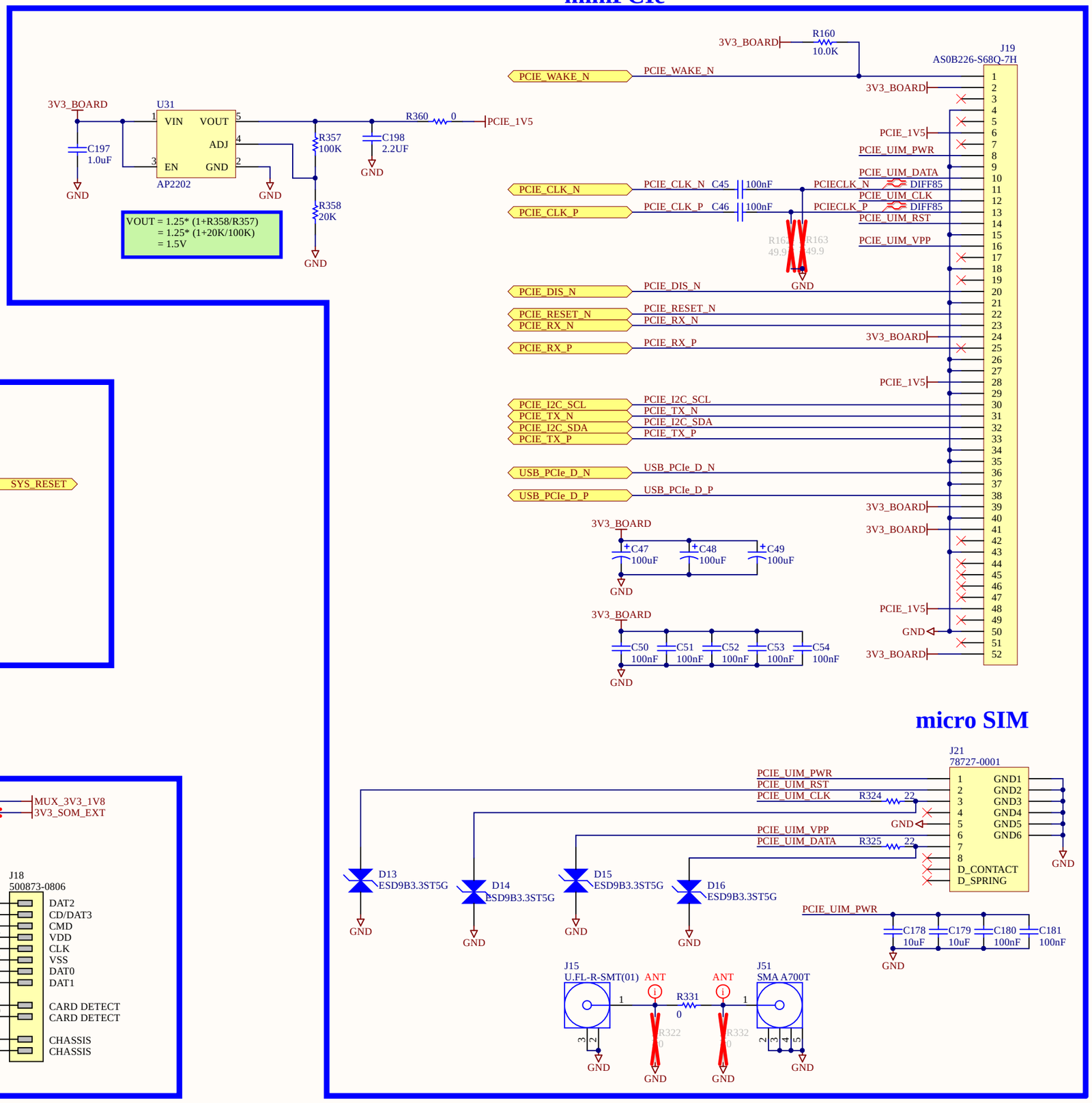

micro SIM

Title: JTAG, SWD, uSD, Mini PCIe, uSIM	
Designer: Juan Anzola	Sheet: 9 of 21
Variant: 55002060-01	Rev: 3P
Description: ConnectCore i.MX8 8M Development board	

CAN

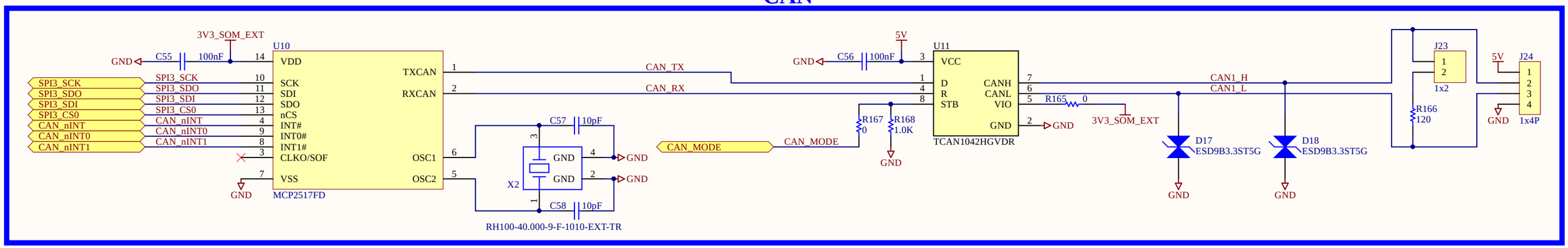

RS485

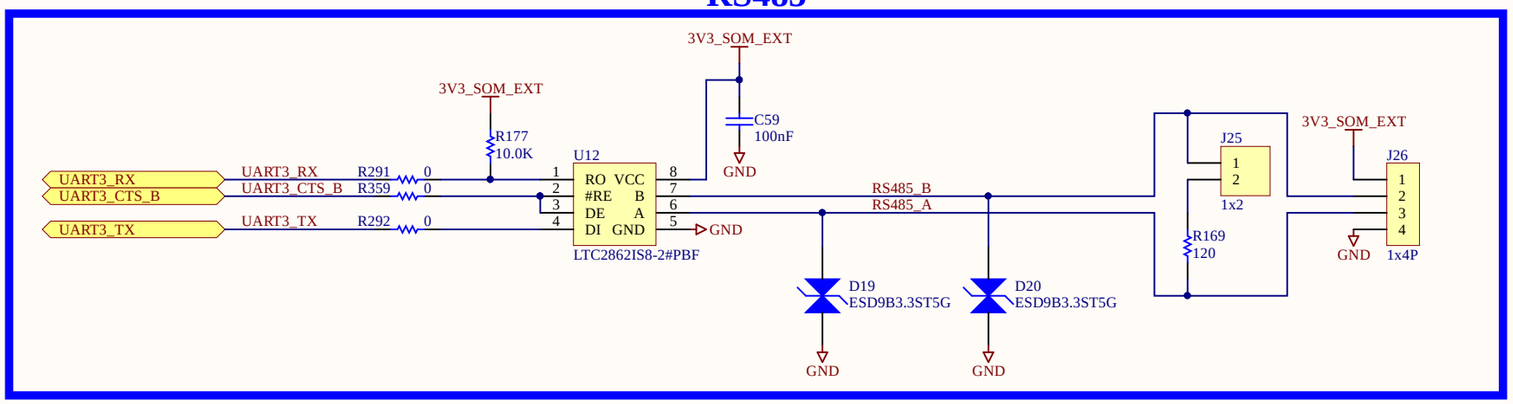

Title: RS485, CAN	
Designer: Juan Anzola	Sheet: 10 of 21
Variant: 55002060-01	Rev: 3P
Description: ConnectCore i.MX8 8M Development board	

Gigabit Ethernet

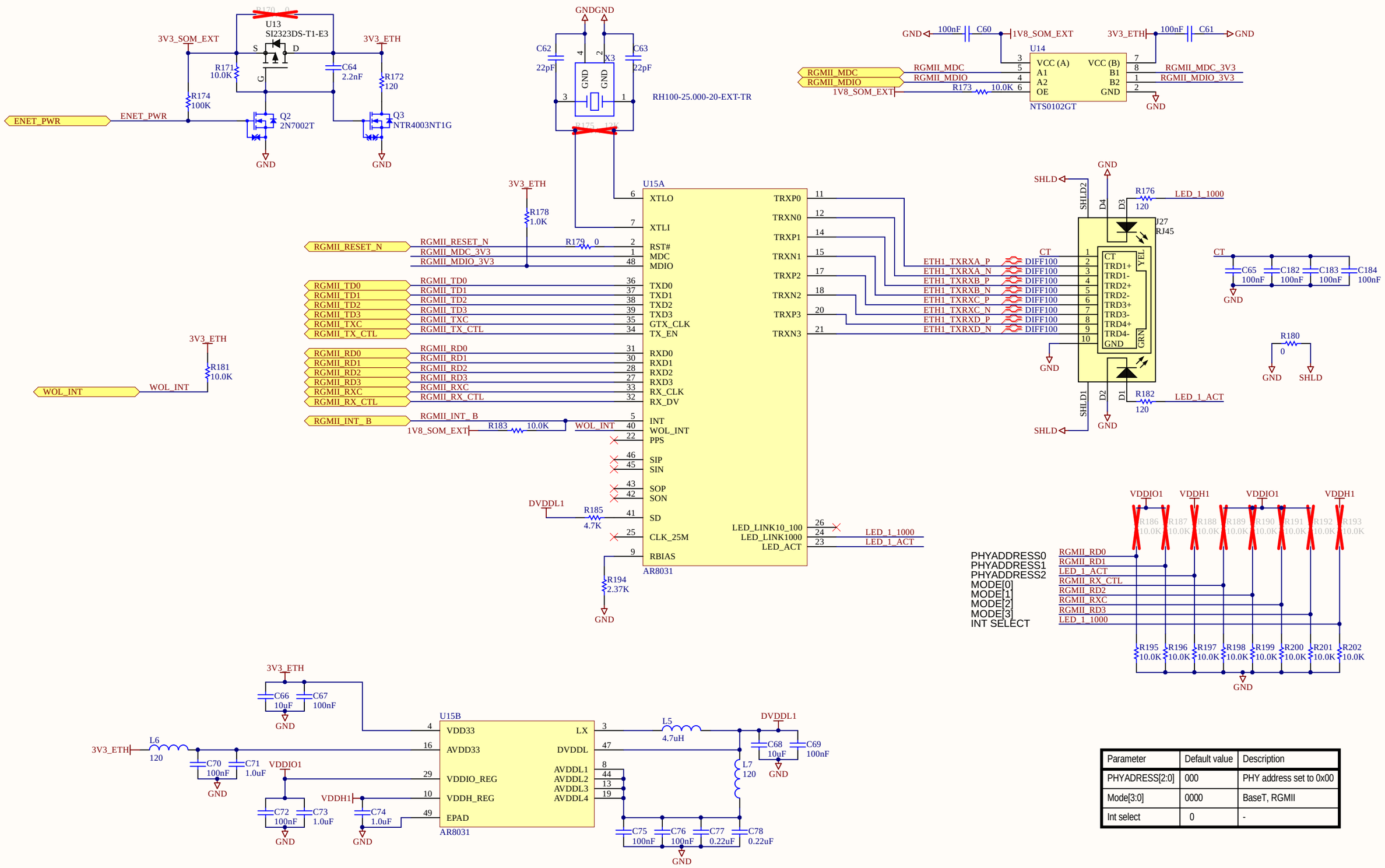

Parameter	Default value	Description
PHYADRESS[2:0]	000	PHY address set to 0x00
Mode[3:0]	0000	BaseT, RGMII
Int select	0	-

Title: Ethernet

Designer: Juan Anzola | Sheet: 11 of 21

Variant: 55002060-01 | Rev: 3P

Description: ConnectCore i.MX8 8M Development board

MIPI Display switch

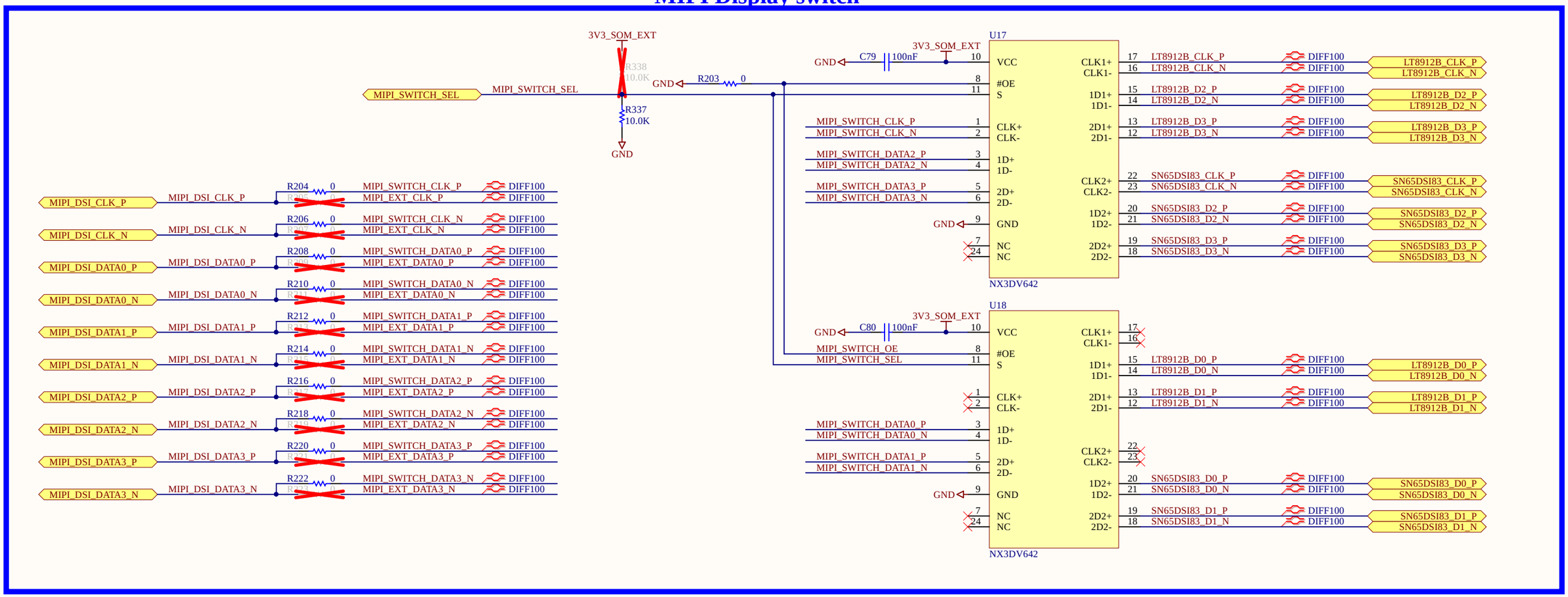

MIPI Camera

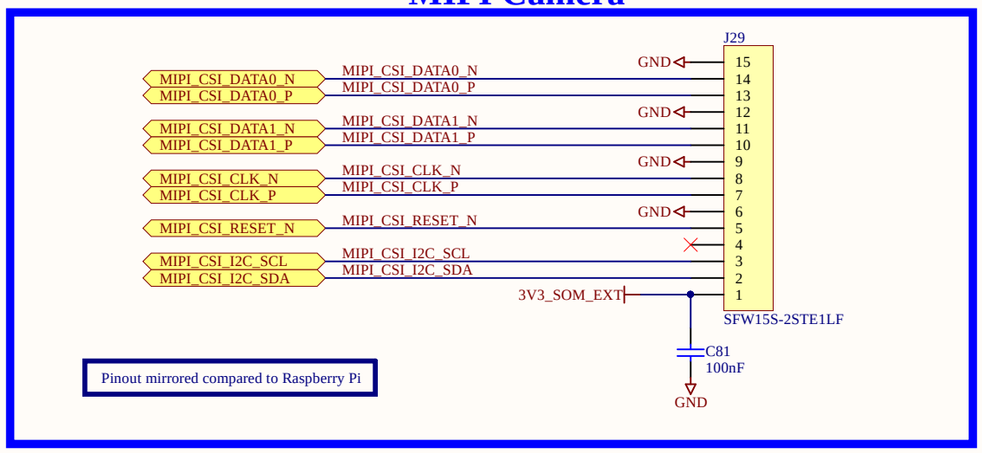

External MIPI display

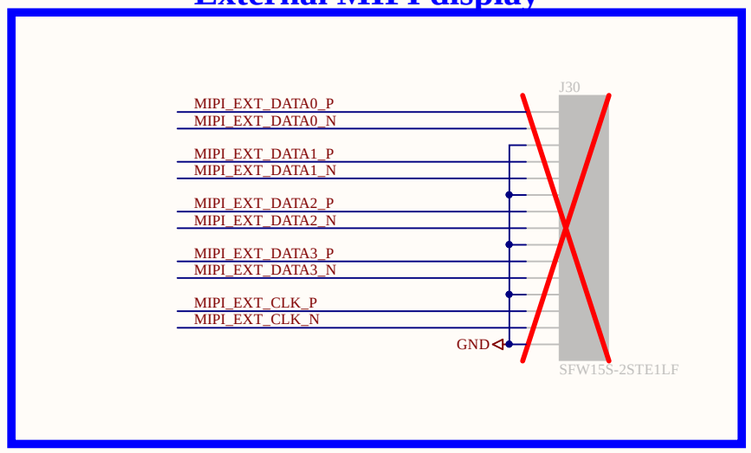

Title: MIPI display and switch, MIPI camera	
Designer: Juan Anzola	Sheet: 12 of 21
Variant: 55002060-01	Rev: 3P
Description: ConnectCore i.MX8 8M Development board	

LT8912 MIPI to HDMI/LVDS bridge

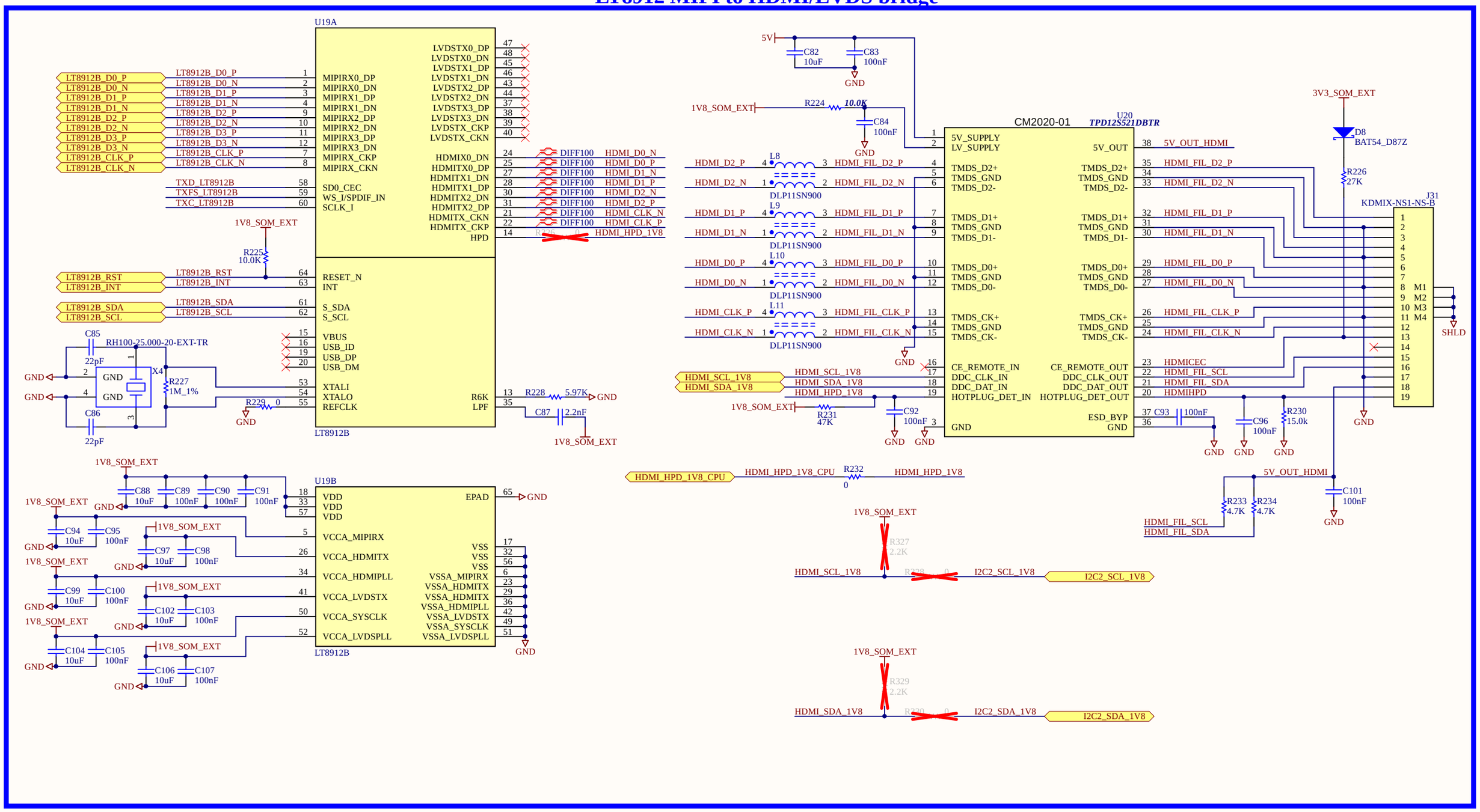

SAI bus selection

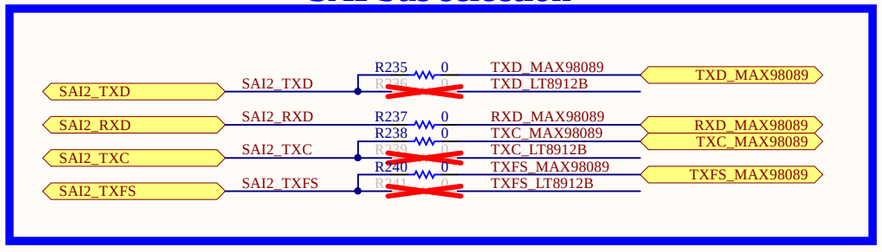

Title: MIPI to HDMI bridge	
Designer: Juan Anzola	Sheet: 13 of 21
Variant: 55002060-01	Rev: 3P
Description: ConnectCore i.MX8 8M Development board	

SN65DSI83 MIPI to LVDS bridge

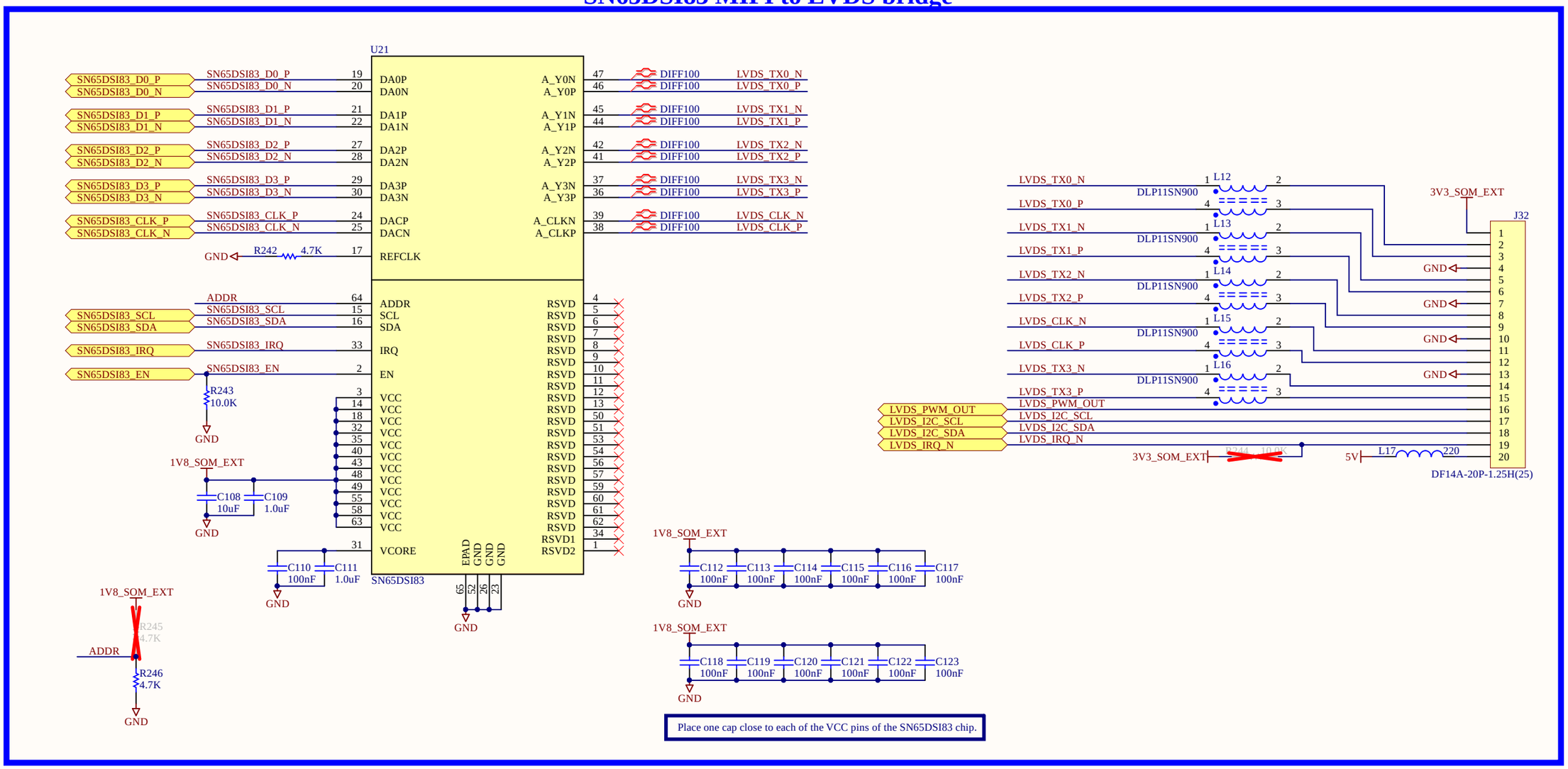

Place one cap close to each of the VCC pins of the SN65DSI83 chip.

Title: MIPI to LVDS bridge	
Designer: Juan Anzola	Sheet: 14 of 21
Variant: 55002060-01	Rev: 3P
Description: ConnectCore i.MX8 8M Development board	

USB HOST

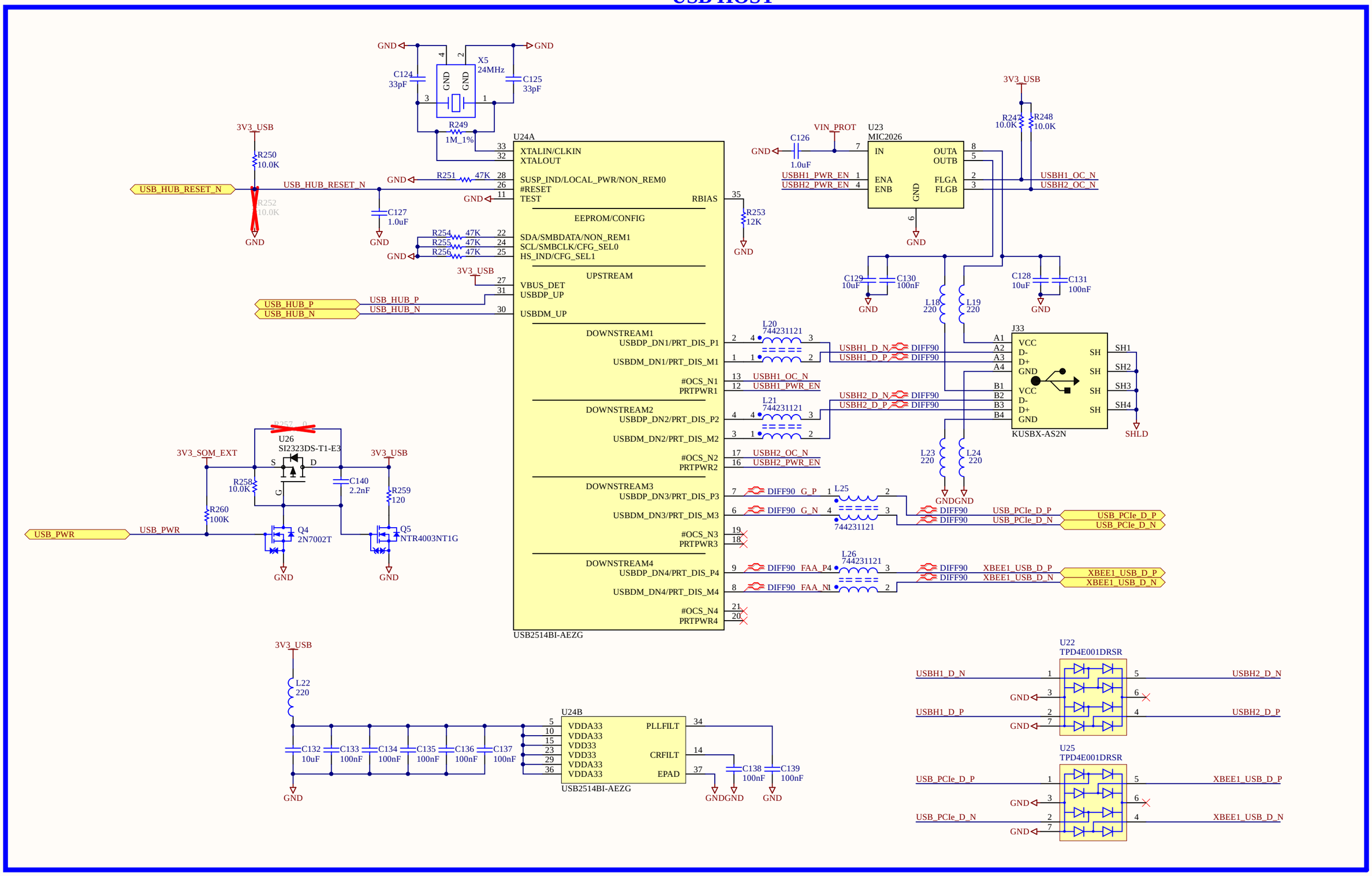

Title: USB HUB	
Designer: Juan Anzola	Sheet: 15 of 21
Variant: 55002060-01	Rev: 3P
Description: ConnectCore i.MX8 8M Development board	

USB Recovery / OTG

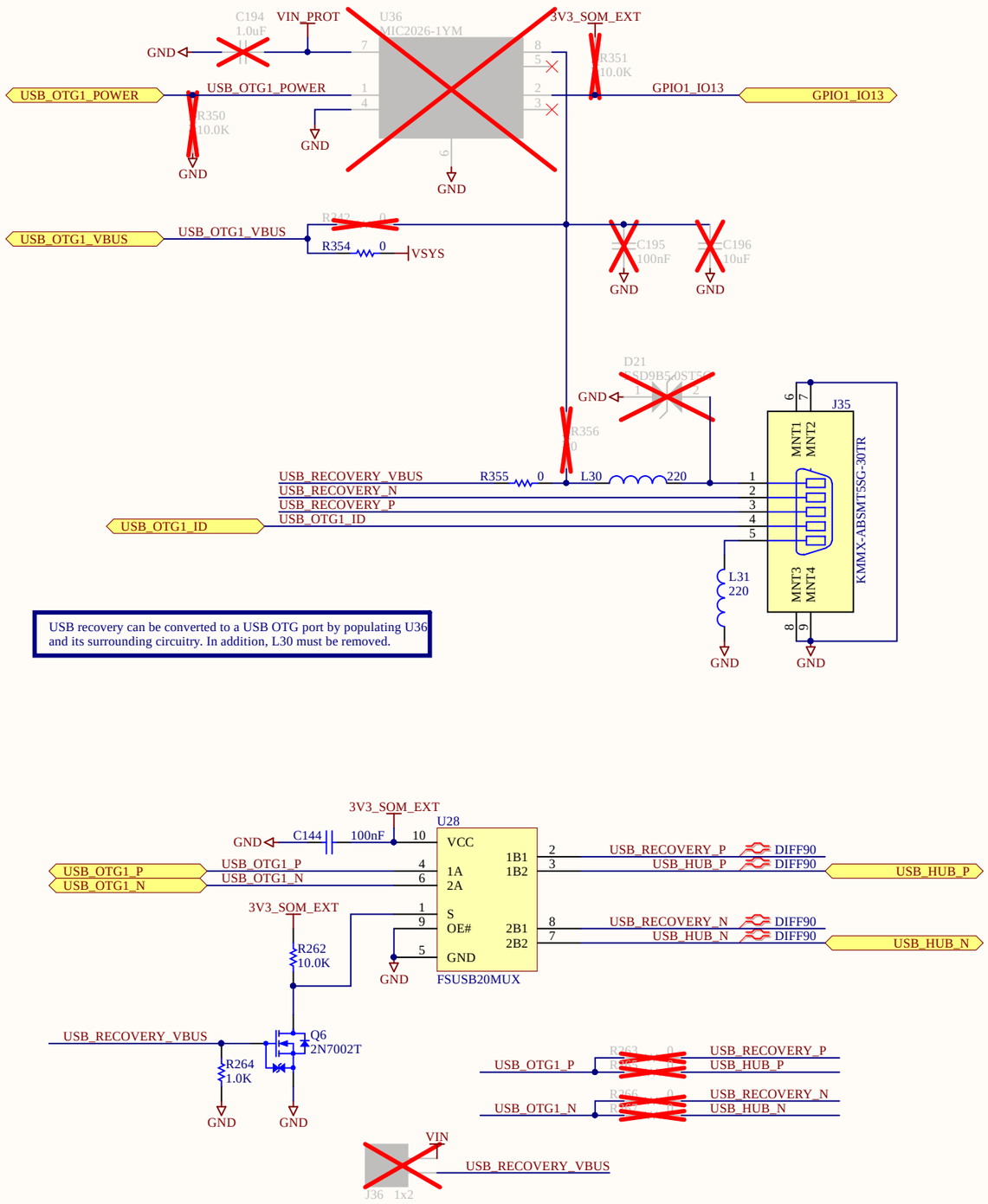

USB OTG

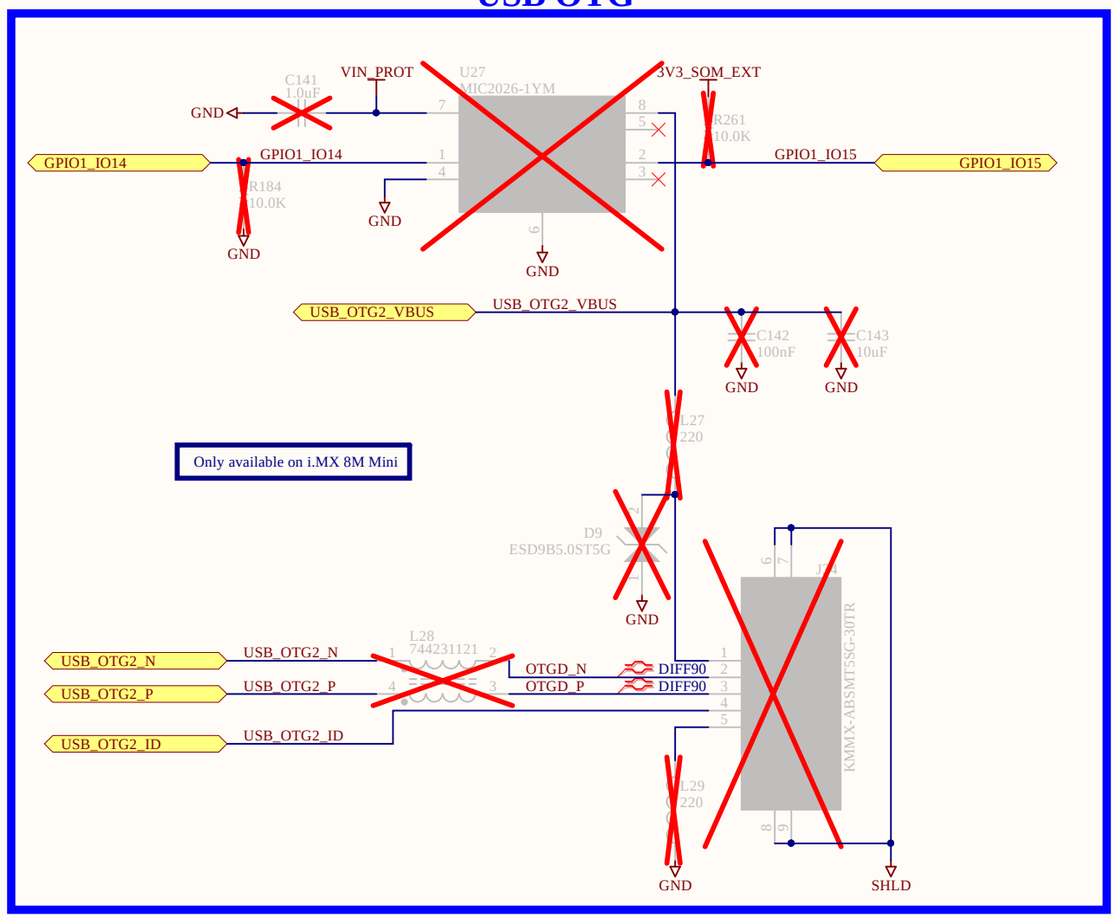

Title: USB Recovery, USB OTG	
Designer: Juan Anzola	Sheet: 16 of 21
Variant: 55002060-01	Rev: 3P
Description: ConnectCore i.MX8 8M Development board	

AUDIO

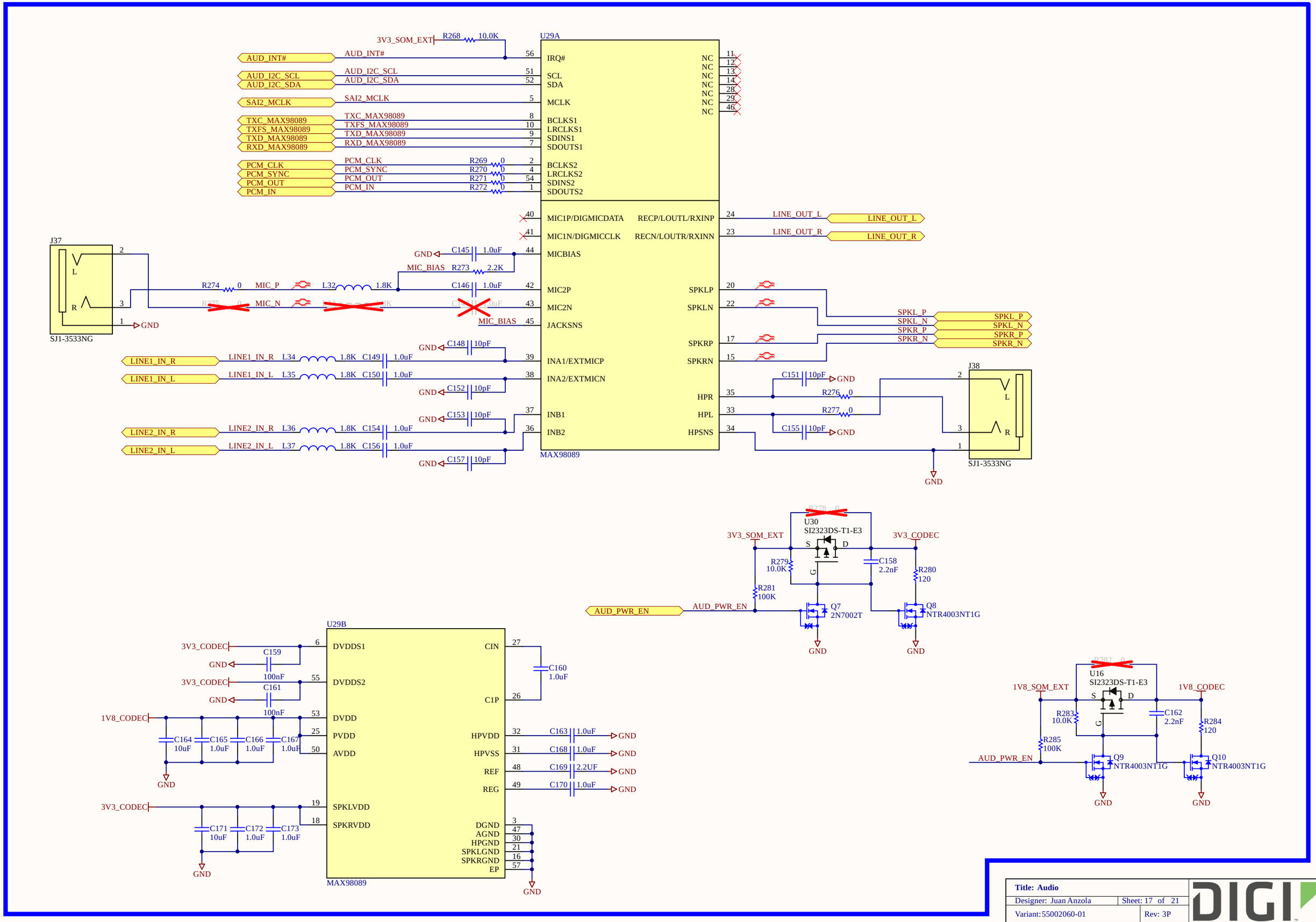

Title: Audio	
Designer: Juan Anzola	Sheet: 17 of 21
Variant: 55002060-01	Rev: 3P
Description: ConnectCore i.MX8 8M Development board	

I2C

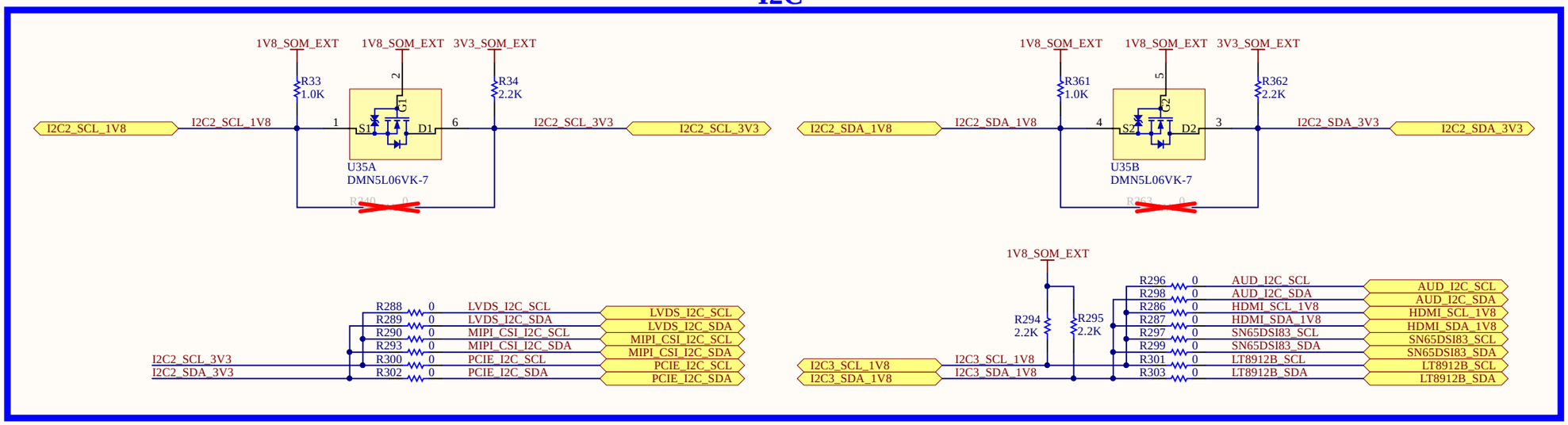

XBee Cellular

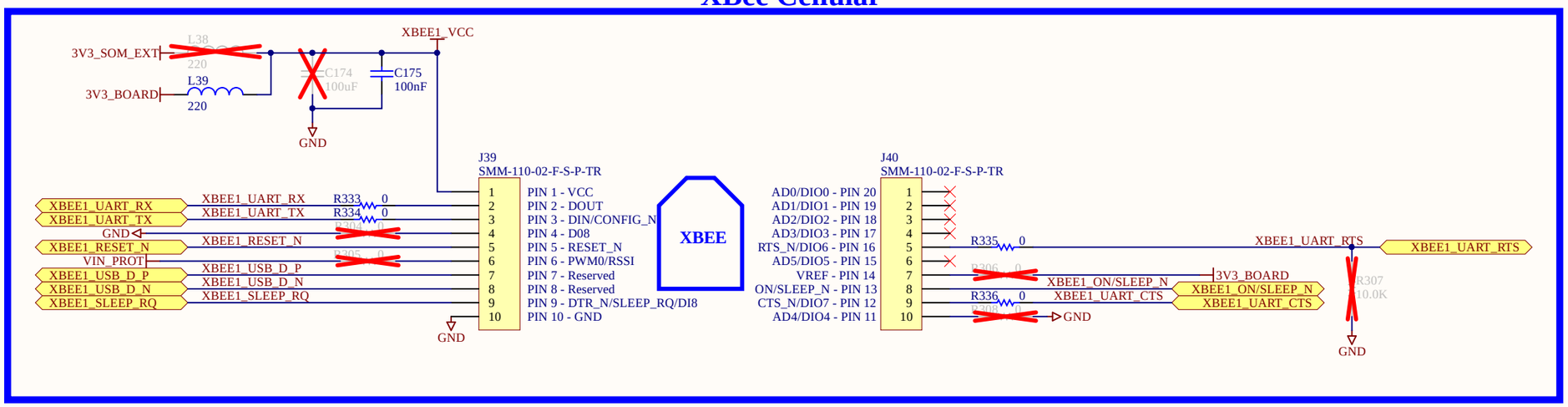

XBee User

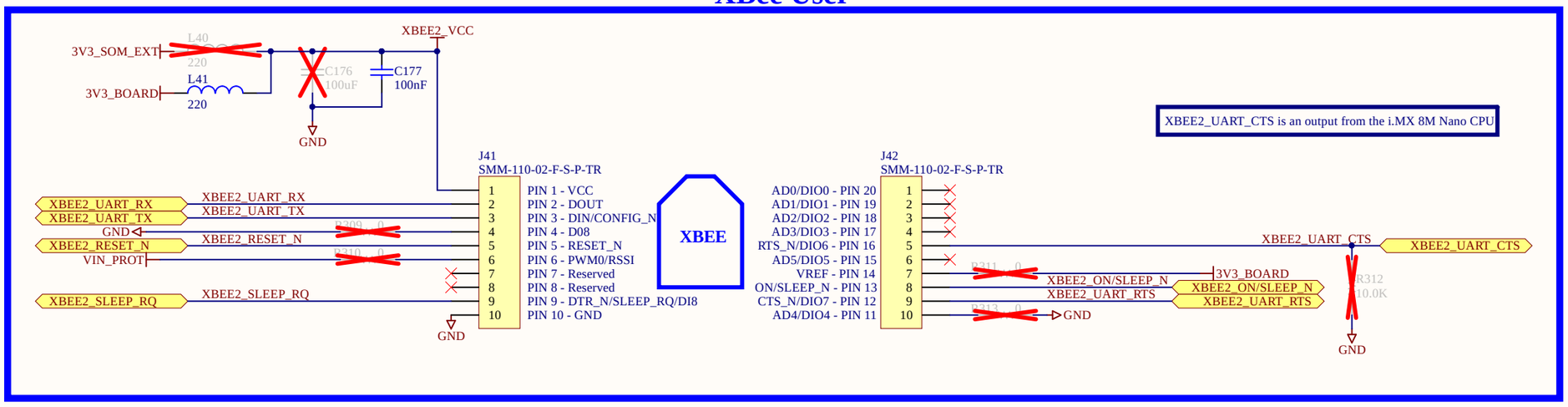

Title: I2C, XBee	
Designer: Juan Anzola	Sheet: 18 of 21
Variant: 55002060-01	Rev: 3P
Description: ConnectCore i.MX8 8M Development board	

Expansion connectors

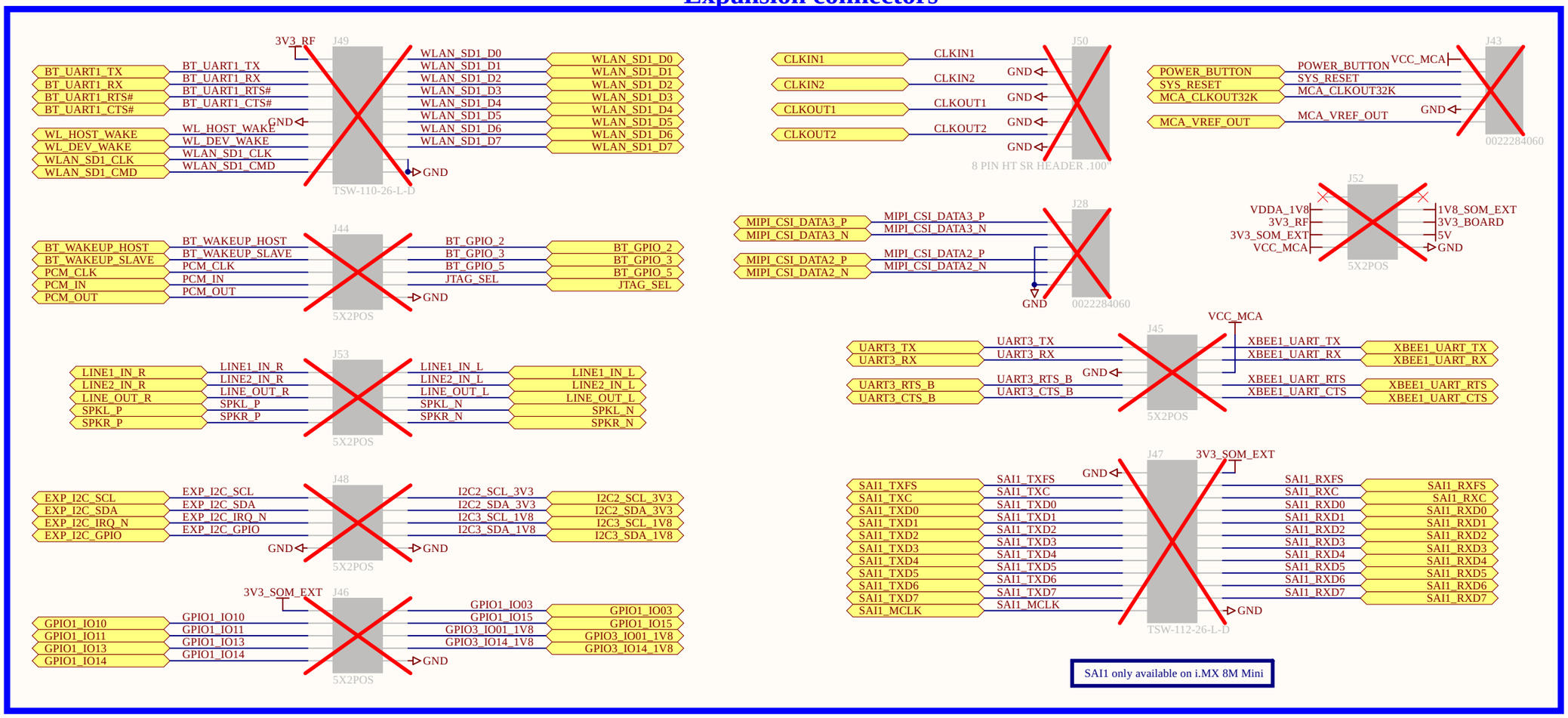

User LEDs & Buttons

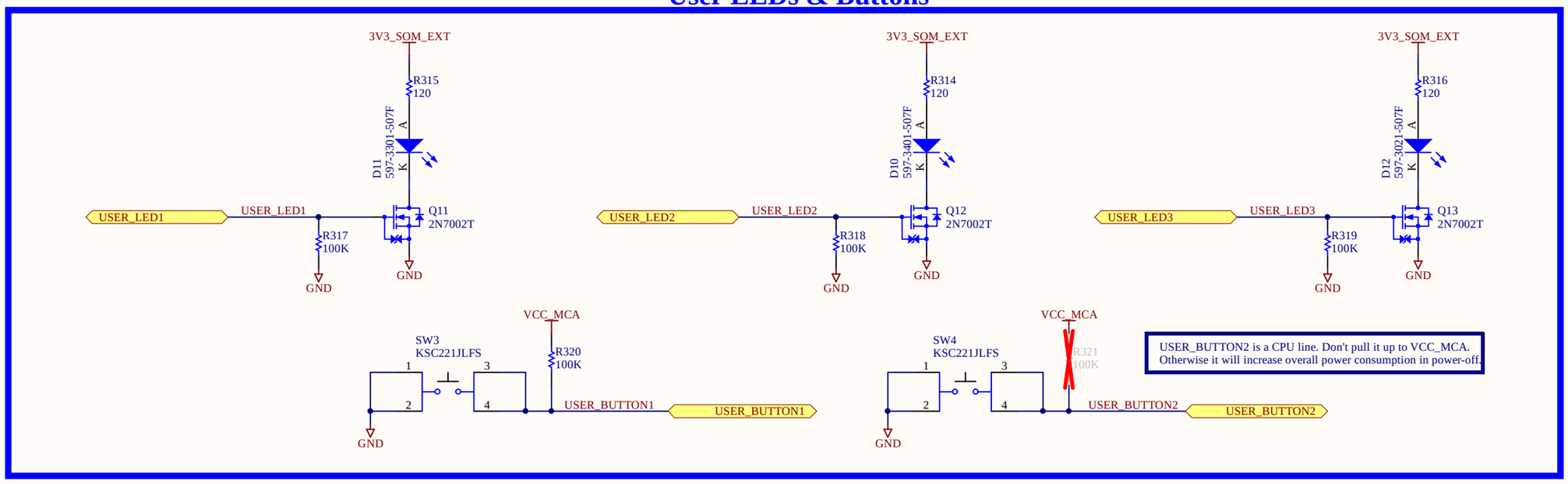

Title: Expansion connectors, User LEDs, RF signal	
Designer: Juan Anzola	Sheet: 19 of 21
Variant: 55002060-01	Rev: 3P
Description: ConnectCore i.MX8 8M Development board	

System Power Rails

Voltage (V)	Supply Name	Block	Generated by	Current Capability (mA)
5.0	VIN	Input power protection	External DC supply	-
		MCA LDO		
	VIN_PROT	ConnectCore 8M Nano	Overvoltage Prot	-
		5V load switch		
		3.3V board regulator		
		USB Host		
		USB OTG		
	5V	CAN	Load switch (U3)	-
		HDMI		
		LVDS		
3.3	3V3_EXT	MicroSD	CC8M	3A Used also inside the SOM
		RS-485		
		CAN		
		Ethernet		
		MIPI CSI		
		LVDS		
		USB HUB		
		Audio		
		XBee1		
		XBee2		
	3V3_BOARD	PCIe	Switching regulator (U4)	3A
		XBee1		
		XBee2		
	VCC_MCA	MCA	AP2202	150mA
3.0	VCC_RTC	RTC	C1	
1.8	1V8_EXT	HDMI	CC8M	3A Used also inside the SOM
		LDVS		
		Audio		
1.5	PCIE_1V5	PCIe	3V3_BOARD	150mA

GPIO Table

Signal Name	GPIO
3V3_BOARD_EN	GPIO3_IO19
5V_DVK_PWR_ON	GPIO1_IO06
AUD_INT#	GPIO3_IO22
AUD_PWR_EN	GPIO3_IO24
CAN_MODE	GPIO5_IO11
CAN_nINT	GPIO1_IO00
CAN_nINT0	GPIO1_IO01
CAN_nINT1	GPIO5_IO01
ENET_PWR	GPIO5_IO04
EXP_I2C_GPIO	GPIO5_IO26
EXP_I2C_IRQ_N	GPIO5_IO27
HDMI_HPD_1V8_CPU	GPIO3_IO08
LT8912B_INT	GPIO3_IO09
LT8912B_RST	GPIO3_IO07
LVDS_IRQ_N	GPIO4_IO28
LVDS_PWM_OUT	MCA_IO17
MIPI_CSI_RESET_N	GPIO1_IO12
PCIE_DIS_N	GPIO3_IO20
PCIE_RESET_N	GPIO3_IO23
PCIE_WAKE_N	GPIO3_IO21
POWER_LED	MCA_IO13
RGMII_INT_B	GPIO5_IO02
RGMII_RESET_N	GPIO5_IO03
SN65DSI83_EN	GPIO3_IO00
SN65DSI83_IRQ	GPIO3_IO06
USB_HUB_RESET_N	GPIO5_IO10
USB_PWR	GPIO3_IO25
USER_BUTTON1	MCA_IO10
USER_BUTTON2	GPIO2_IO20
USER_LED1	MCA_IO12
USER_LED2	MCA_IO18
USER_LED3	GPIO2_IO19
WOL_INT	GPIO5_IO05
XBEE1_ON/SLEEP_N	MCA_IO16
XBEE2_ON/SLEEP_N	GPIO1_IO09
XBEE1_RESET_N	MCA_IO15
XBEE2_RESET_N	GPIO1_IO08
XBEE1_SLEEP_RQ	MCA_IO11
XBEE2_SLEEP_RQ	GPIO1_IO07

I2C2

Peripheral	7-bit address (Hex)
LVDS	-
MIPI CSI	-
Audio	0x10
PCIe	-
Expansion I2C	-

I2C3

Peripheral	7-bit address (Hex)
SN65DSI83	0x2C
LT8912B	0x48, 0x49, 0x4A

Format: DD/MM/YYYY

11/11/2019 - CC8M Development Board
* Revision: 01
- Initial version

18/12/2019 - CC8M Development Board
* Revision: 02
- PCB spin: 3001623x-01 revA => 3001623x-02 revA

20/02/2020 - CC8M Development Board
* Revision: 1P (NPRO-005669)
- Release to 1P without BOM changes

15/09/2020 - CC8M Development Board
* Revision: 2P (ECO-010844)
- PCB spin: 3001623x-02 revA => 3001623x-03 revA

28/10/2020 - CC8M Development Board
* Revision: 2P (ECO-010946)
- Replace U20: 16052004 (going EOL) to 16000235
- Replace C22: 14050618 to 14050730
- Replace R224: 13050387 to 13051084

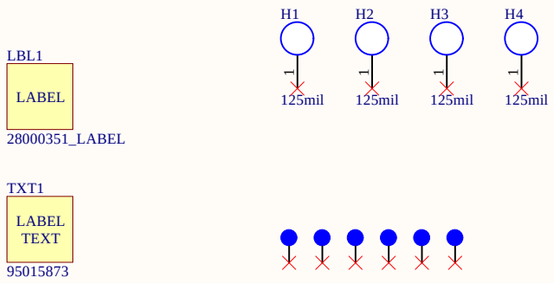

Title: History, Mechanicals		
Designer: Juan Anzola	Sheet: 21 of 21	
Variant: 55002060-01	Rev: 3P	
Description: ConnectCore i.MX8 8M Development board		